Ventilator

Service Manual

Models: vc2 and vc3

August 2026

DOC-0751 Rev. A13 Ventoux Service Manual

SW version 1.30

CE0483

Legal Notice

Disclaimer

FLIGHT MEDICAL INNOVATIONS LTD. (FLIGHT MEDICAL) provides this Operator's Manual in its commitment to help reduce patient risk and injury. However, this manual is not intended to in any way replace or substitute duty of care to a patient, professional responsibility, or professional judgment, nor is it intended to provide any warranty, promise, guarantee, assumption of risk or duty, release, or indemnity. Physicians shall at all times maintain responsibility for patient treatment and outcomes, and FLIGHT MEDICAL further assumes no liability for patient treatment or outcome or for operator's negligence, breach of duty of care, or malpractice.

The Ventoux Ventilator operator is solely responsible for selecting the appropriate level and method of patient monitoring. Product modification or misuse can be dangerous. FLIGHT MEDICAL disclaims all liability for the consequences of product alterations or modifications, as well as for the consequences which might result from the combination of this ventilator with other products, whether supplied by FLIGHT MEDICAL or by other manufacturers, unless such a combination has been specifically endorsed by FLIGHT MEDICAL.

The design of VENTOUX Ventilator, the Operator's and Service Manuals, and the labeling on the ventilator, take into consideration that the purchase and use of the equipment is restricted to trained professionals, and that certain inherent characteristics of the ventilator are known to the operator. Instructions, warnings, and caution statements are therefore limited to the specifics of the VENTOUX Ventilator.

CAUTION

Federal law (US) restricts this device to sale by or on the order of a physician.

This Operator's Manual excludes references to various hazards which are obvious to medical professionals and operators of this equipment, to the consequences of product misuse, and to potential adverse effects in patients with abnormal conditions.

When the VENTOUX Ventilator is used in sub-acute environments, only properly trained personnel should operate the ventilator. The VENTOUX Ventilator is a restricted medical device designed for use by respiratory therapists or other properly trained and qualified personnel under the direction of a physician and in accordance with applicable state laws and regulations.

Transport of patients with the VENTOUX Ventilator requires that medical staff have a good working knowledge of the ventilator's use and problem resolution. Proper emergency backup equipment must be immediately available during transport.

VENTOUX Ventilator operators must recognize their responsibility for implementing safety monitoring mechanisms which supply appropriate information on equipment performance and patient condition. Patient safety may be achieved through a wide variety of means, such as electronic surveillance of equipment performance and patient condition. However, equipment surveillance should not replace direct observation of clinical signs.

The liability of FLIGHT MEDICAL is subject to and limited to the exclusive terms and conditions as set forth herein. Said liability is limited whether arising out of,

or related to, the manufacture and sale of goods, their installation, demonstration, sales representation, use, performance, or otherwise. Any liability based upon product warranty is limited regardless of any fault attributable to FLIGHT MEDICAL and the nature of the action (including breach of warranty, negligence, and strict liability).

The written warranties are in lieu of all other warranties, expressed or implied, including, without limitation, warranties of merchantability, fitness for any purpose, or non-infringement.

FLIGHT MEDICAL shall not be liable for any special incidental or consequential damages incurred by the buyer to a third party. The buyer shall not be entitled to make liability recoveries from FLIGHT MEDICAL due to such situations.

Warranty

The VENTOUX Ventilator warranty does not apply for/ in case of:

- Defects caused by misuse, mishandling, tampering, or by modifications not authorized by FLIGHT MEDICAL or its representatives.
- Rubber and plastic components and materials, which are guaranteed to be free of defects at time of delivery.

Any product which proves during the warranty period to be defective in workmanship or material, will be replaced, credited, or repaired. FLIGHT MEDICAL retains the discretion to select the most suitable of these options. FLIGHT MEDICAL is not responsible for deterioration, wear, or abuse. In all cases, FLIGHT MEDICAL will not be liable beyond the original selling price.

Application of this warranty is subject to the following conditions:

- FLIGHT MEDICAL or its authorized representatives must be promptly notified upon detection of the defective material or equipment.
- Defective material or equipment must be returned to FLIGHT MEDICAL or its authorized representative.
- Examination by FLIGHT MEDICAL or its authorized representatives must confirm that the defect is covered by the terms of this warranty.

The above is the sole warranty provided by FLIGHT MEDICAL. No other warranty, expressed or implied, is intended. Representatives of FLIGHT MEDICAL are not authorized to modify the terms of this warranty.

In no way does this or any of FLIGHT MEDICAL's policies, training materials, guidelines, or instructions create an obligation for FLIGHT MEDICAL to perform any services.

About this document

This document is a service manual for the Ventoux Ventilator, a ventilator that provide continuous or intermittent mechanical ventilation support for the care of individuals who require mechanical ventilation. It is intended for technicians who are responsible for maintaining, servicing, and providing troubleshooting assistance for the Ventoux Ventilator.

For information on how to use the Ventoux Ventilator, see the DOC-0468 Ventoux Operating Manual.

Table of Contents

LEGAL NOTICE II

DISCLAIMER II

WARRANTY III

ABOUT THIS DOCUMENT III

TABLE OF CONTENTS IV

LIST OF FIGURES VII

LIST OF TABLES XI

1 SYMBOLS 1

2 SAFETY INSTRUCTIONS 2

2.1 GENERAL WARNING 2

2.2 CAUTIONS 3

3 GENERAL DESCRIPTION 5

3.1 PHYSICAL – FRONT VIEW 5

3.2 PHYSICAL – REAR VIEW 6

3.3 CONTROLS, INDICATORS AND CONNECTORS 7

3.3.1 Control Indicators and Connectors – Front View 7

3.3.2 Control Indicators and Connectors – Rear View 8

3.4 INTERNAL COMPONENTS DESCRIPTION 9

3.4.1 Internal Components (1 of 2) 9

3.4.2 Internal Components (2 of 2) 11

3.4.3 Front Components Description 12

3.4.4 Cables 13

3.4.5 O2 Mixer Components Description 14

4 VENTOUX BLOCK DIAGRAMS 15

4.1 VENTOUX SYSTEM DIAGRAM 15

4.2 GENERAL BLOCK DIAGRAM 15

4.3 POWER SUPPLY BLOCK DIAGRAM 16

4.4 SCHEMATIC PNEUMATIC PATHWAY 16

4.5 O2 PNEUMATIC CONNECTIONS 17

4.6 NURSECALL ELECTRICAL DIAGRAM 17

5 POWER UP AND SERVICE SCREEN ENTERING 18

5.1 SAFETY 18

5.2 PREPARATIONS 18

5.3 POWER UP 18

5.4 SERVICE SCREEN ENTERING 19

6 SERVICE SCREEN DESCRIPTION 20

6.1 CALIBRATIONS TAB 20

6.1.1 Flow Sensors Calibration 21

6.1.2 O2 Flow Sensors Calibration 22

6.1.3 Overpressure Value Calibration 23

6.1.4 Pneumatic System Calibration 25

6.1.5 FiO2 Sensor Calibration 26

6.1.6 Capnography Device Calibration 27

6.2 TOOLS TAB 28
6.2.1 Turbine Replacement 29
6.2.2 Main Board Update 30
6.2.3 Software Update 31
6.2.4 Import / Export Files 32
6.2.5 Factory Defaults 33
6.2.6 Touch Screen 34
6.2.7 Clear Logs (Production only) 35
6.3 SYSTEM INFORMATION TAB 36
6.3.1 Hardware Information 36
6.3.2 General Information 37
6.4 SYSTEM CONFIGURATION TAB 38
6.4.1 Language 39
6.4.2 Altitude 40
6.4.3 System Clock 41
6.4.4 Ethernet 42
6.4.5 WIFI (When available) 43
6.4.6 Hardware (Production Only) 45
6.4.7 Additional Features 46
6.5 DIAGNOSTICS 47
6.5.1 Start Diagnostic 47
6.5.2 Diagnostics Screen 48
6.5.3 Tests Tree 52
6.5.4 Tests Description 55
7 PREVENTIVE MAINTENANCE 65
7.1 FILTER REPLACEMENT 66
7.1.1 Safety 66
7.1.2 Tools and Equipment 66
7.1.3 Removal 66
7.1.4 Installation 67
7.2 BATTERY CHARGING 67
7.2.1 Safety 67
7.2.2 Tools and Equipment 67
7.2.3 Preparations 67
7.2.4 Procedure 67
8 CORRECTIVE MAINTENANCE 69
8.1 COMPONENTS REPLACEMENT 69
8.1.1 8” and 12” Top Cover Replacement 70
8.1.2 8” and 12” Front Replacement 72
8.1.3 PCB Cage Cover Assy Removal and Installation 76
8.1.4 Power Board (PB) Assy Replacement 77
8.1.5 Extended Board Assy Replacement 79
8.1.6 Nellcor SpO2 PCBA Replacement 80
8.1.7 Main Board (MB) Assy Replacement 82
8.1.8 Cuff Control Board Assy Replacement 84
8.1.9 Front Board Assy - Alarm Board – 8” and 12" Replacement 86
8.1.10 Display Board - Main Board LVDS Cable Replacement 87
8.1.11 8” and 12" Speaker Assy Replacement 88

8.1.12 Exhalation Valve Replacement 90
8.1.13 Internal Mixer Replacement 91
8.1.14 Nebulizer Valve SRS Replacement 94
8.1.15 Proportional Valve Replacement 95
8.1.16 Regulator Replacement 96
8.1.17 O2 Pressure Sensor Replacement 97
8.1.18 O_2 Mixer Driver Assy Replacement 99
8.1.19 Dual Limb Diaphragm Silicone Replacement 101
8.1.20 Oxygen Sensor Replacement 102
8.1.21 Power Supply Assy Replacement 104
8.1.22 AC/DC Power Supply Single-OUT 24V 8.33A Replacement 106
8.1.23 Blower Assy Replacement 107
8.1.24 Three Way Valve Replacement 109
8.1.25 Blower One Way Valve Cassette Replacement 110
8.1.26 Philips Capnography Cable Replacement 111
8.1.27 Oridion Capnography Cable Replacement 112
8.1.28 Oridion Capnography Module Replacement 113
8.1.29 Base Board Assy. Replacement 115
8.1.30 Display Board Assy Replacement 118
8.1.31 Base Board - Front Panel Cable Replacement 121
8.1.32 Outlet Assy. Replacement 122
8.1.33 Nellcor Panel Interface Cable Replacement 124
8.1.34 Battery Replacement 126
8.1.35 LCD Screen Replacement 128
8.1.36 SOM Assy Replacement 130
8.1.37 First Assembly Stage of O2 Mixer Replacement 132
8.1.38 Batteries – Base Board Cable Assy Replacement 134

9 VENTOUX COMPONENTS PART NUMBERS 137

9.1 BOARDS 138
9.2 CABLES 139
9.3 VARIED ASSEMBLIES 140
9.4 O2 MIXER 141

10 OPERATION VERIFICATION PROCEDURE 142

11 REPACKAGING AND SHIPPING 146

12 APPENDICES 147

12.1 SOFTWARE UPDATE WORK INSTRUCTIONS 147

List of Figures

Figure 3-1: Physical – Front View 5
Figure 3-2: Physical – Rear View 6
Figure 3-3: Ventoux – Front View 7
Figure 3-4: Ventoux – Rear view 8
Figure 3-5: Internal Components Description (1 of 2) 10
Figure 3-6: Internal Components Description (2 of 2) 11
Figure 3-7: Front Components Description.....12
Figure 3-8: Cables 13
Figure 3-9: O2 Mixer Components Description.....14
Figure 4-1: System Diagram 15
Figure 4-2: General Block Diagram 15
Figure 4-3: Power Supply Block Diagram 16
Figure 4-4: Schematic Pneumatic Pathway 16
Figure 4-5: O2 Pneumatic Connections.....17
Figure 4-6: Nursecall Electrical Diagram 17
Figure 5-1: Power Source Connection.....18
Figure 5-2: Service Screen Entering (1 of 2) 19
Figure 5-3: Service Screen Entering (2 of 2) 19
Figure 6-1: Flow Sensors Calibration – Screen Description.....21
Figure 6-2: O2 Flow Sensors Calibration – Screen Description.....22
Figure 6-3: Overpressure Value Calibration - Screen Description 24
Figure 6-4: Pneumatic System Calibration – Screen Description 25
Figure 6-5: FiO2 Flow Sensors Calibrations - Screen Description.....26
Figure 6-6: Capnography Device Calibration – Screen Description 27
Figure 6-7: Turbine Replacement – Screen Description.....29
Figure 6-8: Main Board Update – Screen Description.....30
Figure 6-9: Software Update – Screen Description 31
Figure 6-10: Import/Export Files – Screen Description 32
Figure 6-11: Factory Defaults – Screen Description.....33
Figure 6-12: Touch Screen – Screen Description 34
Figure 6-13: Clear Logs – Screen Description 35
Figure 6-14: Hardware Information – Screen Description.....36
Figure 6-15: General Information – Screen Description 37
Figure 6-16: Language – Screen Description 39

Figure 6-17: Altitude Configuration – Screen Description 40
Figure 6-18: System Clock Setup – Screen Description 41
Figure 6-19: System Clock Setup – Screen Description 42
Figure 6-20: WIFI Configuration – Screen Description 44
Figure 6-21: Hardware Configuration – Screen Description 45
Figure 6-22: Additional Features - Screen Description 46
Figure 6-23: Start Diagnostics - Screen Description 47
Figure 6-24: Diagnostics Screen Description (1 of 3).....49
Figure 6-25: Diagnostics Screen Description (2 of 3).....49
Figure 6-26: Diagnostics Screen Description (3 of 3).....50
Figure 6-27: Diagnostics Progress Bar.....50
Figure 6-28: Test Selection and results 51
Figure 6-29: Diagnostic pop-up message example 51
Figure 7-1: Filter Removal and Installation 67
Figure 7-2: Battery Charging 68
Figure 8-1: Top Cover Replacement 70
Figure 8-2: 12" Front Removal (1 of 3) 72
Figure 8-3: 12" Front Removal (2 of 3) 73
Figure 8-4: 12" Front Removal (3 of 3) 73
Figure 8-5: 12" Front Installation (1 of 3).....74
Figure 8-6: 12" Front Installation (2 of 3).....75
Figure 8-7: 12" Front Installation (3 of 3).....75
Figure 8-8: PCB Cage Cover Removal and Installation.....76
Figure 8-9: PB Assy Replacement 77
Figure 8-10: Extended Board Assy Replacement.....79
Figure 8-11: Nellcor SpO2 PCBA Replacement (1 of 2) 80
Figure 8-12: Nellcor SPO2 PCBA Replacement (2 of 2) 81
Figure 8-13: Main board Assy. Replacement 83
Figure 8-14: Cuff-Control Board Assy. Replacement.....84
Figure 8-15: 12” Alarm Board Replacement 86
Figure 8-16: CBL-0092 Cable Replacement.....87
Figure 8-17: 12” Speaker Replacement 89
Figure 8-18: Exhalation Valve Replacement 90
Figure 8-19: Internal Mixer Replacement (1 of 3) 91
Figure 8-20: Internal Mixer Replacement (2 of 3) 92
Figure 8-21: Internal Mixer Replacement (3 of 3) 93

Figure 8-22: Valve Nebulizer Replacement 94
Figure 8-23: Proportional Valve Replacement 95
Figure 8-24: Regulator Replacement 96
Figure 8-25: O2 Pressure Sensor Replacement 98
Figure 8-26: O2 Mixer Driver Assy. Replacement 100
Figure 8-27: Dual Limb Diaphragm Silicone Replacement 101
Figure 8-28: Oxygen Sensor Cover Removal 102
Figure 8-29: Oxygen Sensor Replacement 103
Figure 8-30: Power Supply Assy. Replacement 105
Figure 8-31: AC-DC Power Supply Replacement 106
Figure 8-32: Blower Replacement 108
Figure 8-33: Three Way Valve Replacement 109
Figure 8-34: Blower One Way Valve Cassette Replacement 110
Figure 8-35: Philips Capnography Cable Replacement 111
Figure 8-36: Oridion Capnography Cable Replacement 112
Figure 8-37: Oridion Capnography Module Replacement 114
Figure 8-38: Base Board Assy Replacement- PCBs Removal and installation 116
Figure 8-39: Base Board Assy Replacement- Cabels Removal and installation 117
Figure 8-40: Base Board Assy – Removal and Installation 117
Figure 8-41: Display Board Cover Removal 118
Figure 8-42: Display Board Cables Removal (8”) 119
Figure 8-43: Display Board Cables Removal (12”) 119
Figure 8-44: Display Board Assy. Replacement 120
Figure 8-45: Base Board - Front Panel Cable Replacement 121
Figure 8-46: Outlet Assy. Replacement 123
Figure 8-47: Nellcor Panel Interface Cable Replacement 125
Figure 8-48: Battery Removal and Installation 127
Figure 8-49: Pins Adjustment 129
Figure 8-50: LCD Screen Replacement 129
Figure 8-51: SOM Assy Replacement 130
Figure 8-52: First Assembly Stage of O2 Mixer Replacement 133
Figure 8-53: Batteries – Base Board Cable Assy Replacement (1 of 3) 135
Figure 8-54: Batteries – Base Board Cable Assy Replacement (2 of 3) 135
Figure 8-55: Batteries – Base Board Cable Assy Replacement (3 of 3) 136
Figure 9-1: Ventoux Boards 138
Figure 9-2: Ventoux Cables 139

Figure 9-3: Ventoux Varied Assemblies 140
Figure 9-4: O2 Mixer Parts 141
Figure 12-1: SD Card Slot in Main Board 147
Figure 12-2: Jumper Location in Main Board 148
Figure 12-3: Jumper Location in Power Board 148

List of Tables

Table 3-1: Physical – Front View 5
Table 3-2: Physical – Rear View 6
Table 3-3: Ventoux – Front view 7
Table 3-4: Ventoux – Rear view 8
Table 3-5: Internal Components Description (1 of 2) 9
Table 3-6: Internal Components Description (2 of 2) 11
Table 3-7: Front Components Description 12
Table 3-8: Cables 13
Table 3-9: O2 Mixer Components Description 14
Table 4-1: Different Modes 17
Table 6-1: Calibration / Flow Sensors– Screen Description 21
Table 6-2: Calibration / O2 Flow Sensors– Screen Description 22
Table 6-3: Calibration / Overpressure Value– Screen Description 23
Table 6-4: Pneumatic System Calibration – Screen Description 25
Table 6-5: FiO2 Sensor Calibration – Screen Description 26
Table 6-6: Calibration / Capnography Device– Screen Description 27
Table 6-7: Tools / Turbine Replacement – Screen Description 29
Table 6-8: Tools / Main Board Update – Screen Description 30
Table 6-9: Tools / Software Update – Screen Description 31
Table 6-10: Tools / Import / Export Files – Screen Description 32
Table 6-11: Tools / Factory Defaults – Screen Description 33
Table 6-12: Touch Screen – Screen Description 34
Table 6-13: Clear Logs – Screen Description 35
Table 6-14: System Information / Hardware Information – Screen Description 36
Table 6-15: System Information / General Information – Screen Description 37
Table 6-16: System Configuration / Language – Screen Description 39
Table 6-17: System Configuration / Altitude– Screen Description 40
Table 6-18: System Configuration / System Clock – Screen Description 41
Table 6-19: System Configuration / Ethernet – Screen Description 42
Table 6-20: System Configuration / WIFI – Screen Description 43
Table 6-21: System Configuration / Hardware Configuration – Screen Description 45
Table 6-22: System Configuration / Additional Features – Screen Description 46
Table 6-23: System Diagnostics – Screen Description 47
Table 6-24: Diagnostics – Screen Description 48

Table 6-25: Tests Tree 52
Table 6-26: Tests Description.....55
Table 7-1: Preventive Maintenance 65
Table 9-1: Boards Part Numbers.....138
Table 9-2: Cables Part Numbers 139
Table 9-3: Varied Assemblies Part Numbers 140
Table 9-4: O2 Mixer Part Numbers.....141
Table 10-1: Tests/Calibrations Results 142
Table 10-2: Ventilation Set Parameters 142
Table 10-3: Ventilation Test Run 143

1 Symbols

Symbol	Description
	On/Off
	Mute
	Caution; consult accompanying documents (check symbol)
	Type BF applied part
	Double Isolation
	Temperature limitation
	Humidity limitation
	Atmospheric pressure limitation
	DC – Direct Current
	AC – Alternating Current
	USB – Universal Serial Bus
	LAN – Local Area Network
O_2 Vmax 15 l/min	Low-Flow Oxygen Port
O_2 2.4 – 6.2 BAR 35 – 90 PSI	High Pressure Oxygen Port
	MR unsafe – keep away from magnetic resonance imaging (MRI) equipment
	Dispose of according to standard local regulation requirements for electronic components
	Manufacturer address of device

2 Safety Instructions

At all times, strictly follow this manual. The safe use of the VENTOUX Ventilator requires full understanding of its operation, and adherence to the manual's instructions. Observe all of the WARNINGS and CAUTIONS posted in this manual.

2.1 General Warning

WARNING

External power connection: The VENTOUX is specially designed for 2-prong home use electrical, floating-ground, AC power connection. Always disconnect the external power supply and two batteries prior servicing.

WARNING

Do not position next to a curtain that blocks the flow of cooling air, thereby causing the ventilator to overheat.

WARNING

There is a risk of explosion if used in the presence of flammable anesthetics.

WARNING

Always use an outlet filter or equivalent at the Airway Pressure Connector, to protect the internal transducers from moisture and other contaminants.

WARNING

Adding attachments, other components or sub-assemblies to the ventilator breathing system can change the pressure gradient across the breathing system which can adversely affect the ventilator performance.

WARNING

The ventilator is ready for operation only when it is completely assembled.

WARNING

Do not use unapproved / antistatic or electrically conductive patient circuits with the Ventoux.

WARNING

Only a FLIGHT MEDICAL approved exhalation valve can be used with the VENTOUX Ventilator

WARNING

Always ensure that the Power LED is illuminated after connecting the ventilator to an external AC or DC power source. If the LED is not illuminated, check all power connections, and resolve any problems.

WARNING

Only an authorized FLIGHT MEDICAL factory-trained technician can service or perform repairs on the VENTOUX Ventilator.

MR unsafe – keep away from magnetic resonance imaging (MRI) equipment.

WARNING

The Ventilator shall not be used with inlet gases, which are not specified for use such as nitric oxide or with helium or mixtures with helium. Such use might cause the ventilator to not function correctly, causing patient death or serious deterioration of health.

WARNING

The ventilator shall not be used in a hyperbaric chamber. Such use might cause the ventilator to not function correctly, causing patient death or serious deterioration of health.

2.2 Cautions

CAUTION

Only use medical grade oxygen with the high- and low-pressure ports.

CAUTION

As Lithium-Ion batteries are charged and discharged over time, their ability to hold a charge is decreased with use. This can shorten the length of time the ventilator can function while on battery power.

CAUTION

The batteries should be replaced when they no longer meet the needs of the user. This depends on several factors including settings and usage patterns.

CAUTION

When the VENTOUX Ventilator is used for transport applications, ensure that the internal batteries are fully charged prior to use.

CAUTION

The flow resistance of the air inlet filter, located at the rear of the ventilator, is likely to increase with repeated use. Ensure that the filter is checked and changed regularly.

CAUTION

Do not cover the ventilator nor place liquid containers in the immediate vicinity or on top of the ventilator. Liquids that get into the ventilator can cause equipment malfunction and damage.

CAUTION

Do not open the ventilator or perform service on an open unit while connected to external power.

CAUTION

Use standard antistatic techniques while working inside the ventilator or handling any electronic parts.

CAUTION

To prevent cross-contamination, clean all external parts of the ventilator prior to servicing.

CAUTION

Water in the oxygen supply can cause equipment malfunction and damage.

CAUTION

When the ventilator is not likely to be used for a long period of time, remove the batteries.

CAUTION

Batteries contain Li-Ion. Do not discard them in an incinerator or force them open. Batteries should be disposed of according to WEE and not be disposed of with normal waste.

	Review VENTOUX Ventilator Service Manual before servicing the ventilator.
	Use the tools and equipment specified in this manual to perform specific procedures.
	Charge the batteries for a minimum of three hours before powering the ventilator from the batteries. This provides fully charged batteries
	During storage, charge the batteries for a minimum of three hours every 30 days. This provides charged batteries.
	As good practice, always plug the VENTOUX Ventilator into an AC power supply source when not in use, to ensure best battery performance.

3 General Description

The VENTOUX Ventilator is an electrically powered, microprocessor-controlled multi-parameter ventilator, which can be Time, Pressure, Flow or Volume triggered; Volume or Pressure con-trolled; Time or Flow cycled.

Manual inflation is allowed, and the Ventoux supports the emergency intake of ambient air which permits the patient to pull ambient air into the breathing circuit in the event of a complete loss of air/gas supply.

3.1 Physical – Front View

Table 3-1: Physical – Front View

Item No.	Name	Description
1	Touch screen display	Enables the user to modify the ventilation, alarm, and technical settings, and to view real time patient data, alarms, battery status and logs.
2	Alarm Speakers Cover	Covers and protects the alarm speakers
3	O2 Sensor Cover	Covers and enables quick access to O2 Sensor

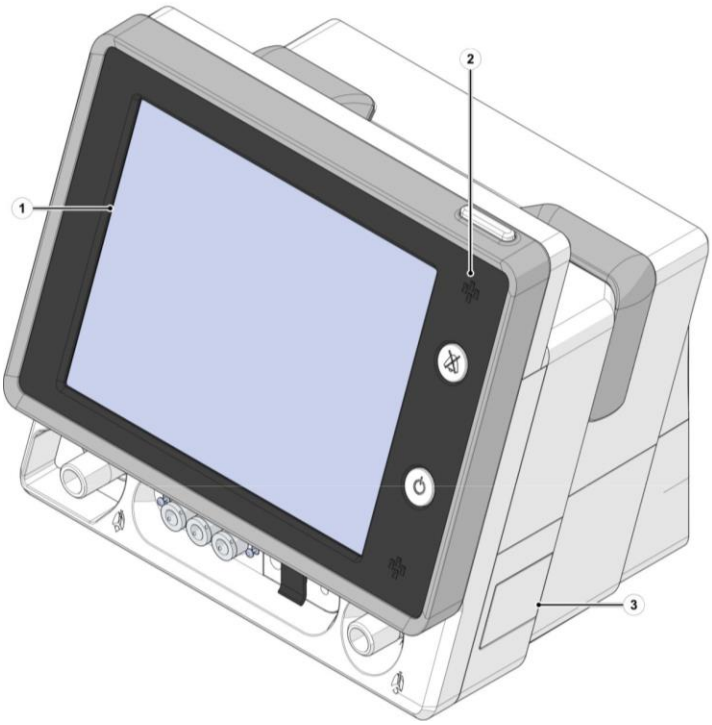

Figure 3-1: Physical – Front View

3.2 Physical – Rear View

Table 3-2: Physical – Rear View

Item No.	Name	Description
1	Top Cover	Covers all Ventoux electrical and mechanical components
2	Filter Cover	Covers and protects blower filter
3	Handle	Used to carry the Ventoux during transportation

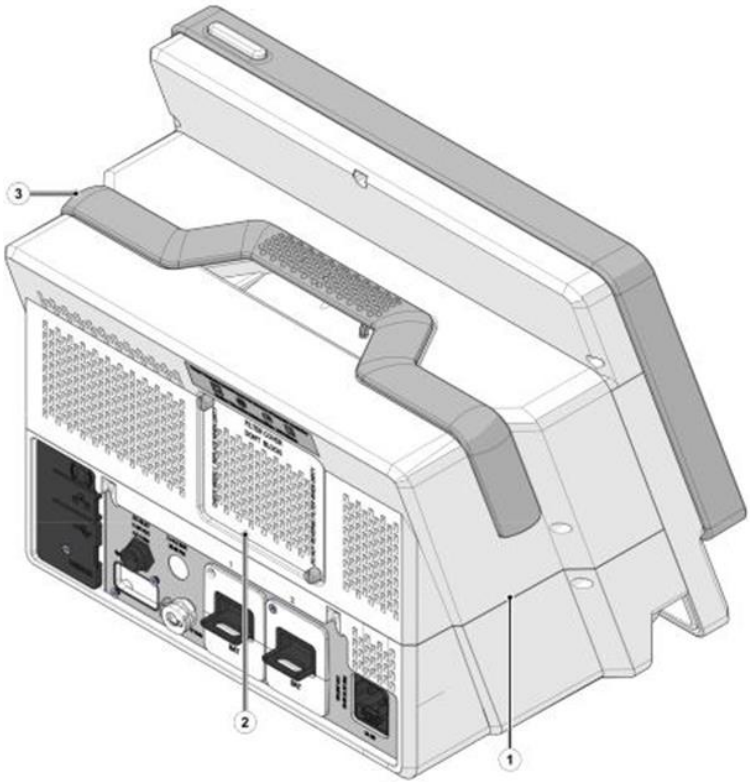

Figure 3-2: Physical – Rear View

3.3 Controls, Indicators and Connectors

3.3.1 Control Indicators and Connectors – Front View

Table 3-3: Ventoux – Front view

Item No.	Name	Description
1	360° Alarm LED	Flashes red or yellow to indicate there is an alarm.
2	Mute	When pressed temporarily silences the audible alarm for 2 minutes; when repressed during alarm silence - resets silence status.
3	On/Off button	Turns the ventilator on and stops ventilation. A green LED on the button indicates connection to an external power supply.
4	Patient Circuit Connector	Gas outlet, connects the patient circuit inspiratory limb.
5	Cuff Port (optional)	For connecting to the patient Cuff tube.
6	Capnography CO2 Port (optional)	For connecting to a Capnography Filter line from the patient.
7	Nebulizer Port (optional)	For connecting to a pneumatic nebulizer.
8	Proximal Connection Ports	For Connecting to the patient circuit if a proximal flow sensor is used or single limb patient circuit is used.
9	Dual Limb Exhalation Valve	Connects the patient circuit expiratory limb.

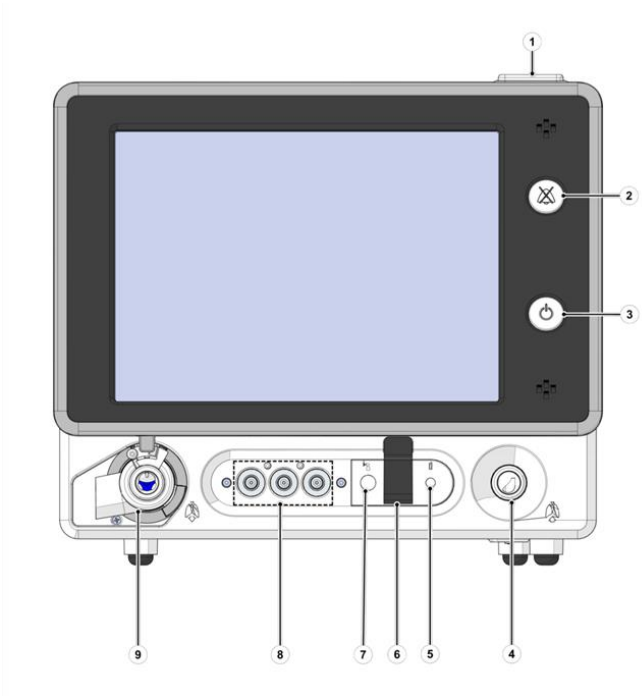

Figure 3-3: Ventoux – Front View

3.3.2 Control Indicators and Connectors – Rear View

Table 3-4: Ventoux – Rear view

Item No.	Name	Description
1	AC Inlet with Fuse	100 – 240 V AC, 50 – 60 Hz, Fuse 8A (SB or TL)
2	Low Flow Oxygen Port	Low flow oxygen enrichment source (up to 345 kPa, 0 – 15 L/min)
3	High Pressure O2 Port (optional)	Connects to high pressure O2 (240 – 620 kPa, 21% - 100%)
4	SpO2 port (optional)	Gas outlet, connects the patient circuit inspiratory limb.
5	DC Inlet	11 – 30 VDC
6	HDMI	To be Implemented in future version
7	USB 1, USB 2	USB ports for SW loading to the ventilator or for logfiles exportation. For authorized and qualified service technicians only ( )
8	LAN (RJ45)	LAN for network logging ( )
9	COM1 (RJ11)	Remote alarm / Nurse call connector.

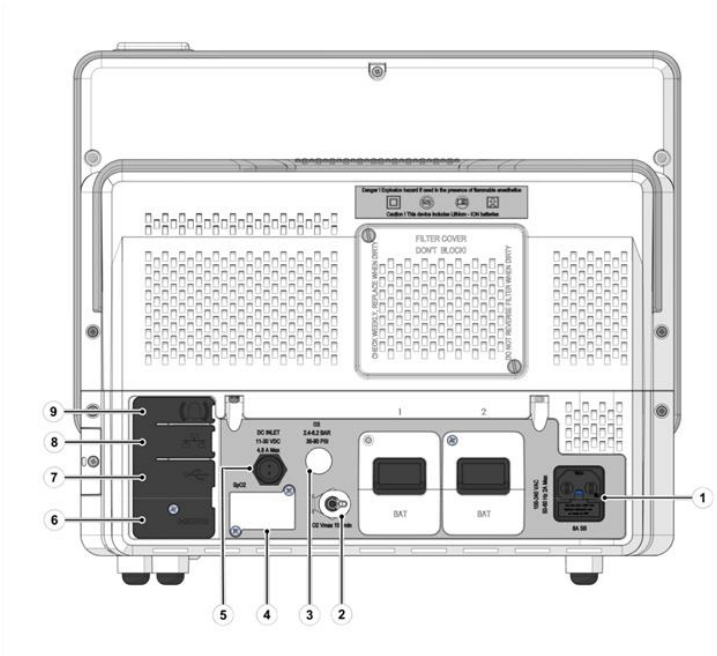

Figure 3-4: Ventoux – Rear view

3.4 Internal Components Description

3.4.1 Internal Components (1 of 2)

Table 3-5: Internal Components Description (1 of 2)

Item No.	Name	Description
1	O2 Mixer Assy (see section 3.4.5) (optional)	Control the oxygen supply from oxygen source to the patient.
2	Power Supply Assy	Assembly contain DC power supply, cooling fans and fan to keep high pressure inside the power supply assembly.
3	AC/DC Power Supply Single-OUT 24V 8.33A	Power supply convert AC Power to 24V DC.
4	Blower one way valve	Enables the patient to pull ambient air into the patient circuit. Acts as emergency air inlet in the event of complete system failure.
5	Battery Pack Assy (x2)	Chargeable batteries that supply power to Ventoux when main power is disconnected.
6	Blower Assy	Generate the air required to ventilate the patient.
7	Power Board (PB)	Performs the following: • Controls battery packs charging. • Converts and supplies internal DC voltages. • Control the turbine suppling the air.
8	Nellcor SPO2 PCBA (optional)	Measures patient oxygen saturation.
9	Main Board (MB) Assy	Contains Ventoux real time processor, sensors, purge pumps, zero solenoids and SOM, responsible for all interaction with the user.

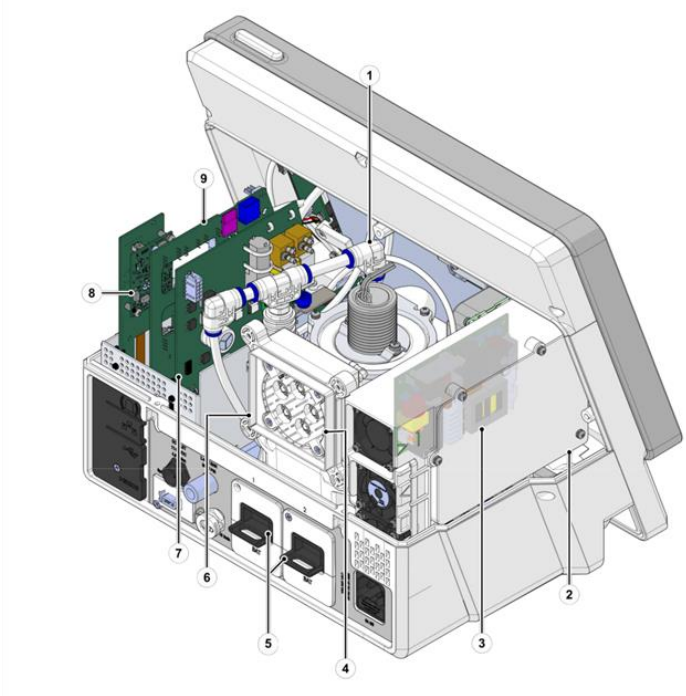

Figure 3-5: Internal Components Description (1 of 2)

3.4.2 Internal Components (2 of 2)

Table 3-6: Internal Components Description (2 of 2)

Item No.	Name	Description
1	Extended Board Assy (optional)	Interface Board between optional cards (SPO2 and Cuff control and the main board).
2	Nellcor Panel Interface (PI) Cable (optional)	Transfers data from Nellcor Panel Interface to Nellcor SpO2 PCBA.
3	Oxygen Sensor	Measures the oxygen level supplied to the patient.
4	Base Board Assy	Interfaces between all Ventoux boards or cards.
5	Three-way valve Assy	Air flow measurement at Exhalation Valve and patient circuit.
6	NanoMediCO2 Module and cable (optional)	Measures CO2 concentration in patient breathing gasses and transfers the measurement to the Base Board.

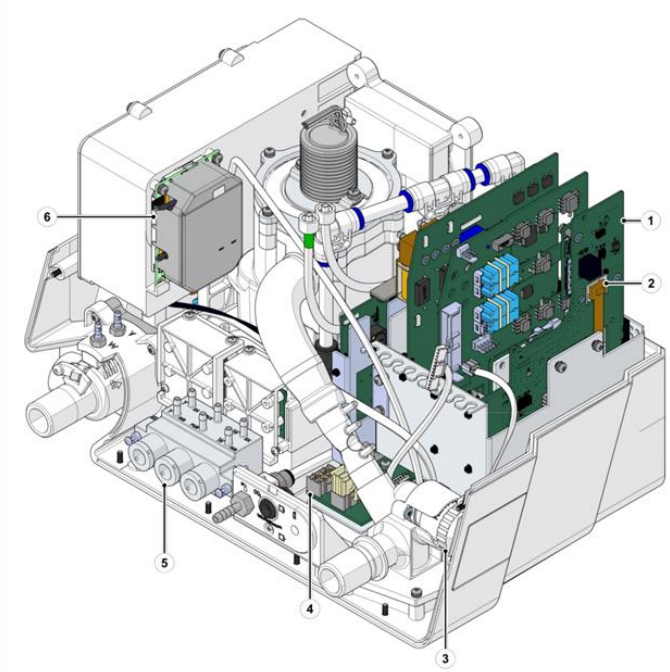

Figure 3-6: Internal Components Description (2 of 2)

3.4.3 Front Components Description

Table 3-7: Front Components Description

Item No.	Name	Description
1	Speaker Assy for Front Panel 12" (x2)	Speakers - responsible for audio alarm sound.
2	Display Board Assembly	A video card, connects the Main Board to the display screen and to the touch panel.
3	Alarm Board	• Power On/Off card • Supplies signal to the speakers for sound alarm • Supplies the power for the visual alarm LED's.
4	Speaker Assy for Front Panel 8" (x2)	Speakers - responsible for audio alarm sound.

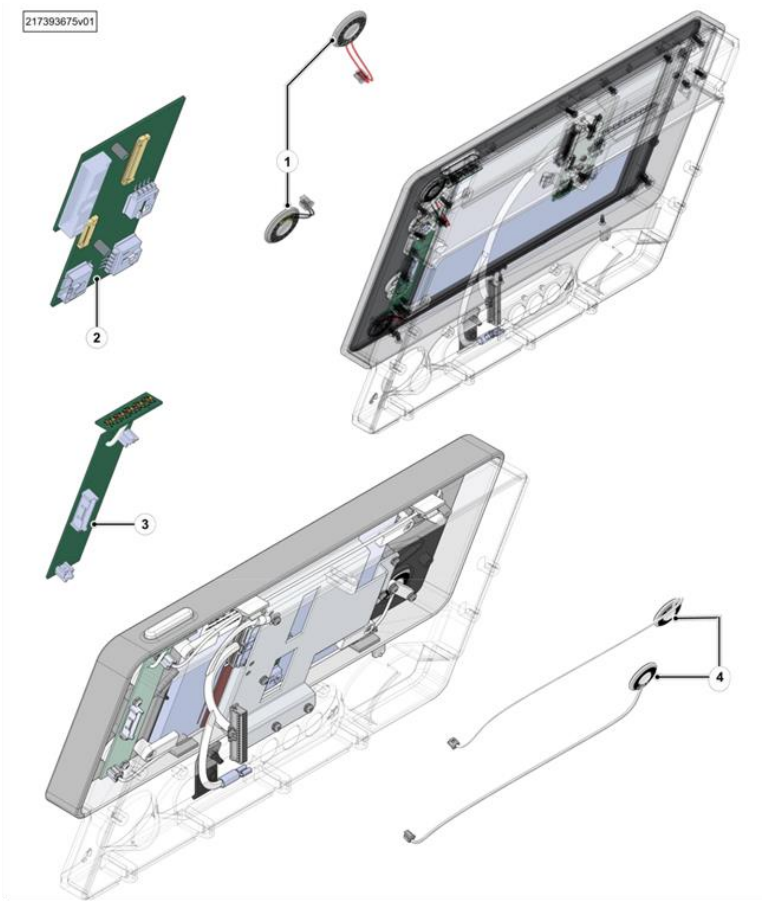

Figure 3-7: Front Components Description

3.4.4 Cables

Table 3-8: Cables

Item No.	Name	Description
1	Base Board-Front Panel Cable	Transfers data from the Front Panel to the Base Board.
2	Display Board – Main Board LVDS Cable	Transfers data from Main Board to Display Board to show on screen and vice versa for transfers user inputs to the Main Board.
3	Battery-1-Base Board Cable Assy	Transfers battery pack 1 data and power to the Base Board.
4	Battery-2-Base Board Cable Assy	Transfers battery pack 2 data and power to the Base Board.
5	O2 Pressure Sensor- O2 Board Cable Assy	Transfers O2 pressure sensor measurement to O2 Board.

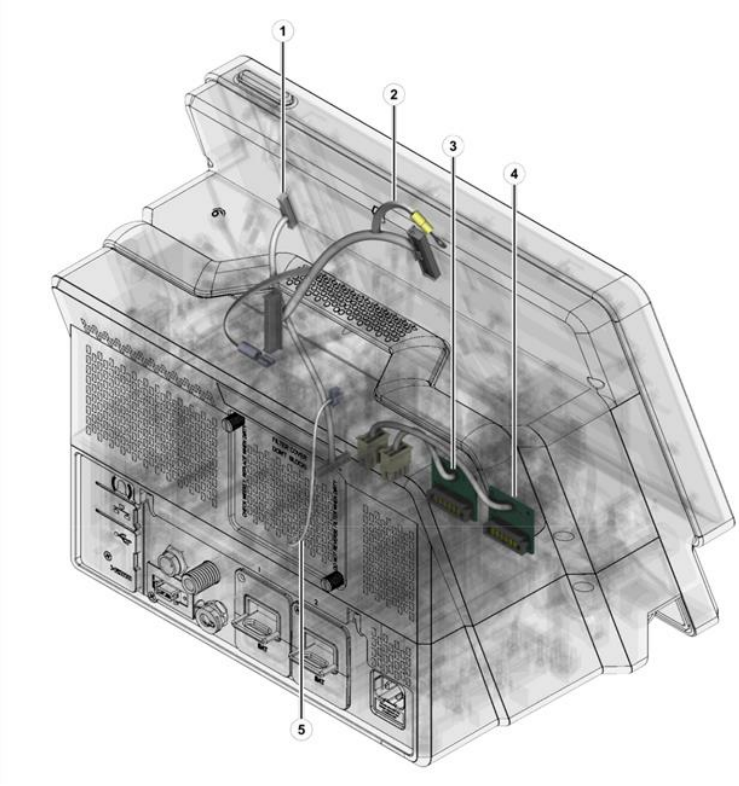

Figure 3-8: Cables

3.4.5 O2 Mixer Components Description

Table 3-9: O2 Mixer Components Description

Item No.	Name	Description
1	O2 Mixer Driver Assy	Controls the O2 mixer.
2	O2 Pressure Sensor	Measures O2 inlet pressure to Ventoux.
3	O2 Internal Mixer Manifold	Regulates oxygen amount supplied to the patient.
4	Nebulizer solenoid	A valve that supplies commands for timing and amount of drug delivery through the tube in the outer panel.
5	Regulator	Converts oxygen source pressure to patient pressure.
6	Sub Valve Proportional VSO-MAX	Oxygen manifold distribute Oxygen from the regulator to other components.

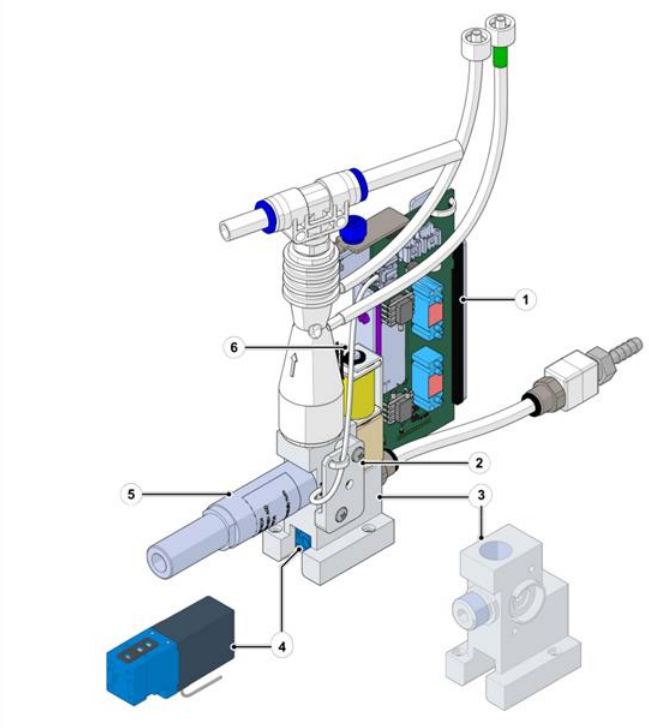

Figure 3-9: O2 Mixer Components Description

4 Ventoux Block Diagrams

4.1 Ventoux System Diagram

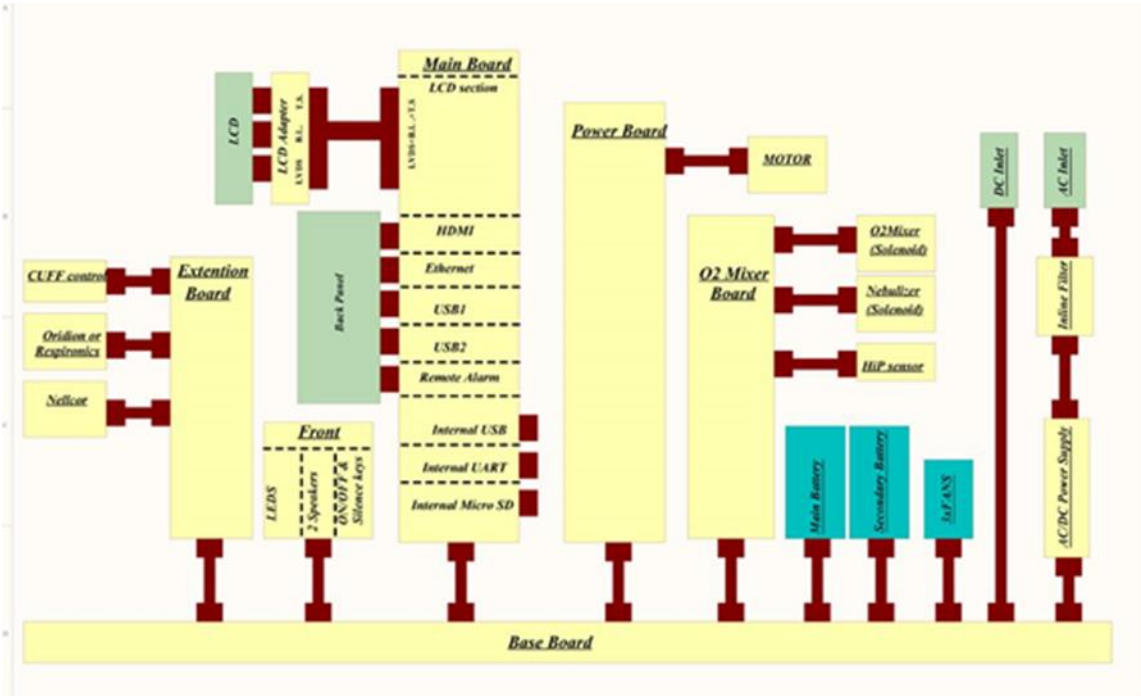

Figure 4-1: System Diagram

4.2 General Block Diagram

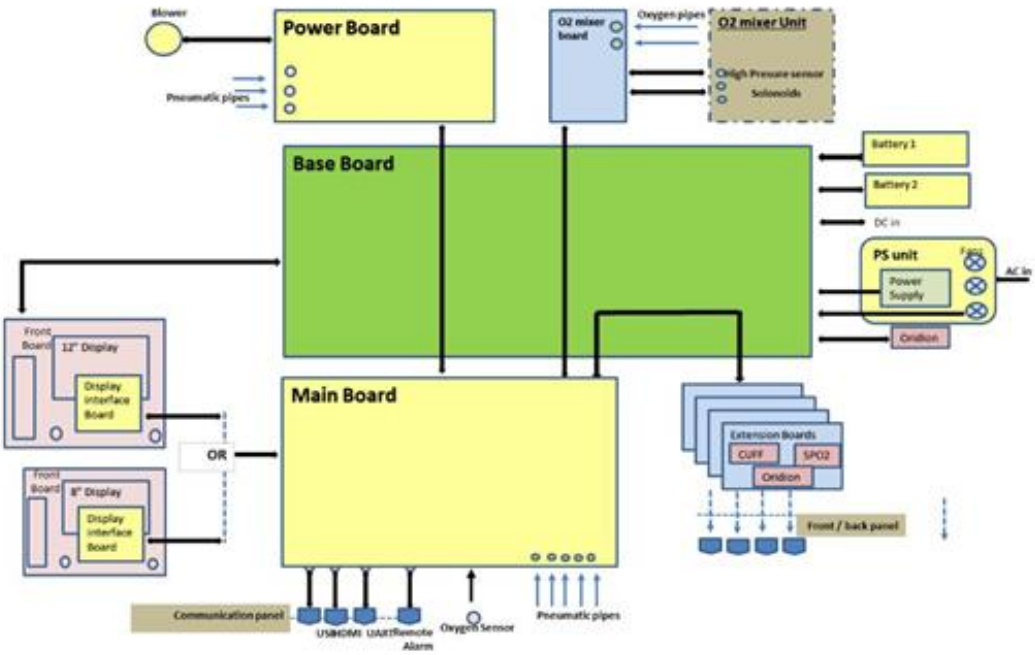

Figure 4-2: General Block Diagram

4.3 Power Supply Block Diagram

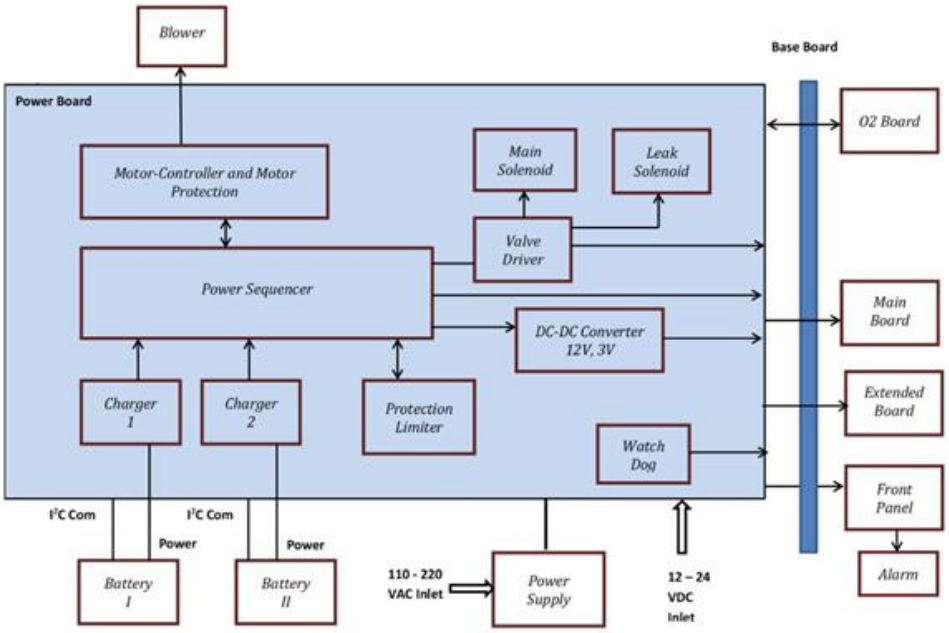

Figure 4-3: Power Supply Block Diagram

4.4 Schematic Pneumatic Pathway

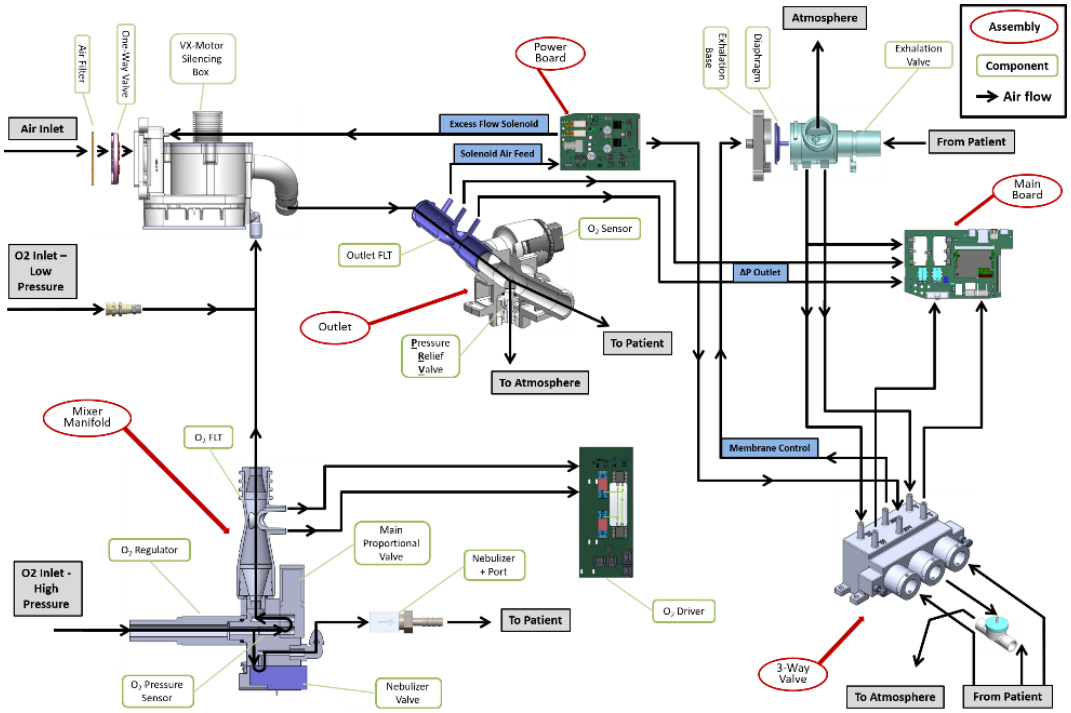

Figure 4-4: Schematic Pneumatic Pathway

4.5 O2 Pneumatic Connections

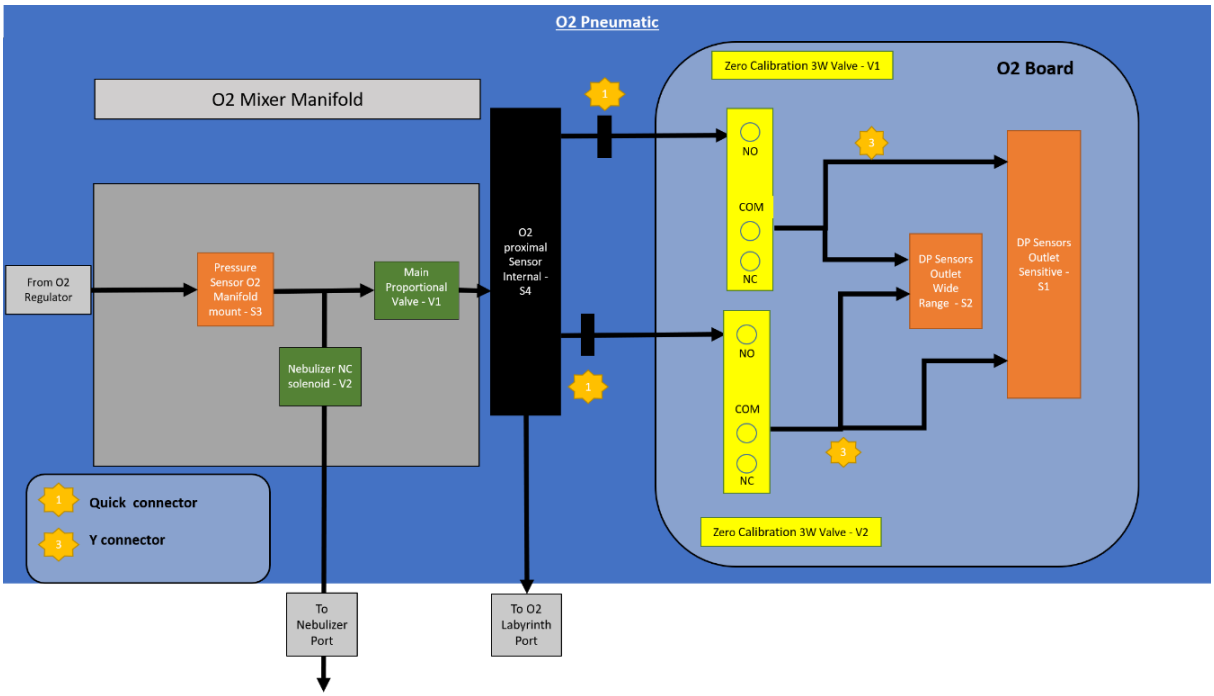

Figure 4-5: O2 Pneumatic Connections

4.6 Nursecall Remote Alarm Connection

Nurse-call station can be connected to the Ventoux remote alarm connection (COM1 – RJ11). The ventilator is using a relay, located on the main board that has a dry contact with 3 wires (common, normally open and normally close).

The following table shows the different behavior of the relay.

Table 4-1: Relay's Different Behavior

State	Alarm	Relay	Connections
Vent Off	N/A	Not Energized	COM-NC → CLOSED COM-NO → OPEN
Vent On	NO	Energized	COM-NC → OPEN COM-NO → CLOSED
	YES	Not Energized	COM-NC → CLOSED COM-NO → OPEN

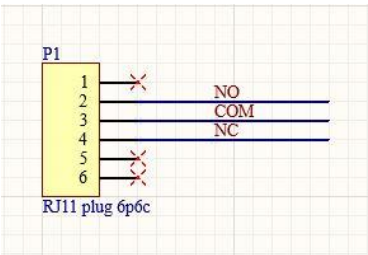

Figure 4-6: RJ11 Remote Alarm Connection

5 Power Up and Service Screen Entering

5.1 Safety

See safety instructions (see clause 2)

5.2 Preparations

Connect Ventoux to DC (2) or AC (1) power source.

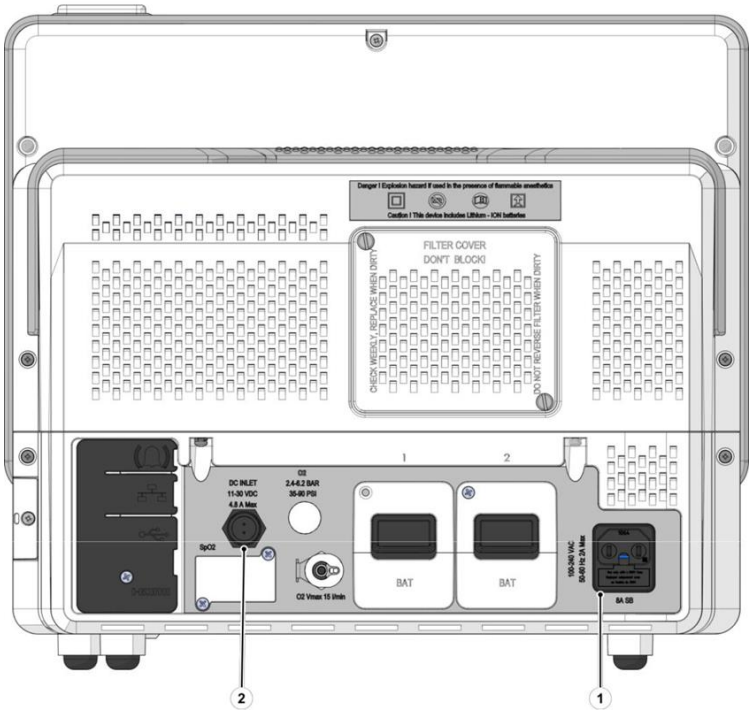

Figure 5-1: Power Source Connection

5.3 Power Up

1. Press on the On/Off button (1).

   The Ventoux performs a brief self-test to ensure proper microprocessor functionality.

   Start Ventilation window appears.

2. Click on Service icon (2).

Figure 5-2: Service Screen Entering (1 of 2)

5.4 Service Screen Entering

1. Enter the password (**5555**) by clicking the number pad (1).
2. Click OK (2).

   Service screen appears.

Figure 5-3: Service Screen Entering (2 of 2)

6 Service Screen Description

The service screen is composed of five tabs:

- Calibration (see section 6.1) – enables the user to perform all necessary Ventoux Calibrations.
- Tools (see section 6.2) – enables the user to perform updates, logs treatment and other Ventoux options settings.
- System Information (see section 6.3) – provides the user the Ventoux hardware and software information.
- System Configuration (see section 6.4) - enables the user to configure the Ventoux.
- System Diagnostics (see section 6.5) – enables the user to perform tests to the Ventoux.

6.1 Calibrations Tab

The Calibration Tab is composed of six sub-tabs:

- Flow Sensor Calibration (section 6.1.1)
- O2 Flow Sensors Calibration (section 6.1.2)
- Overpressure Valve Calibration (section 6.1.3)
- Pneumatic System Calibration (section 6.1.4)
- FiO2 Sensor Calibration (section 6.1.5)
- Capnography Device Calibration (Optional) (section 6.1.6)

6.1.1 Flow Sensors Calibration

Flow sensor calibration will require external flow measurement device like: IMT PF-300 of one of the CITREX devices (H3, H4 or H5) from IMT Analytics. There are two ways to perform the calibration: Manual or Automatic.

In manual mode the user will enter the flow reading from the external measuring device in Measured Flow Window (5) and press the Next button (4) until the end of the Calibration.

For Automatic calibration use cable (CBL-0266 for IMT PF-300 or CBL-0264 for CITREX) from KIT-0095 to connect the Ventilator (USB port) to the measurement device using CBL-0263. Wait few seconds after the connection to allow the ventilator to recognize the measurement device and press the Start button (6).

Please follow on screen instruction for the different connection of pipes and ventilator flow sensor (Total 3 setups) by using parts from KIT-0095.

Table 6-1: Calibration / Flow Sensors– Screen Description

Item No.	Name	Description
1	Progress Bar	Visual status (percentage) of calibration process.
2	Instructions window	Provides a step-by-step instruction in order to perform the calibration procedure.
3	Result Window	Provides the user a textual result of the calibration process.
4	Next Button	By clicking the Next button, Measured Flow window (5) displays the IMT measurement.
5	Measured Flow Window	• Displays the IMT measure • The user manually changes the measure value
6	Start Button	Used to start the calibration process.

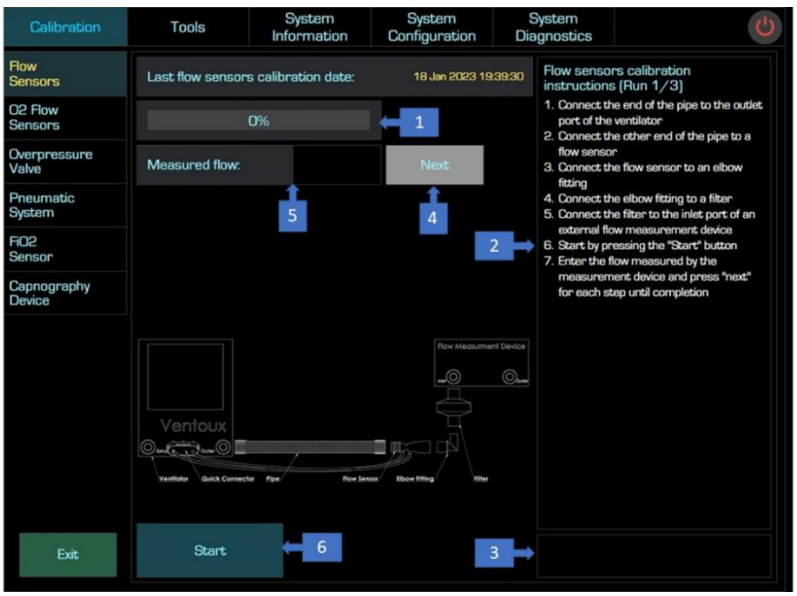

Figure 6-1: Flow Sensors Calibration – Screen Description

6.1.2 O2 Flow Sensors Calibration

Table 6-2: Calibration / O2 Flow Sensors– Screen Description

Item No.	Name	Description
1	Progress Bar	Visual status (percentage) of verification process.
2	Instructions Window	Provides a step-by-step instruction in order to perform the verification procedure.
3	Result Window	Provides the user a textual result of the calibration process.
4	Start Button	Used to start the calibration process.

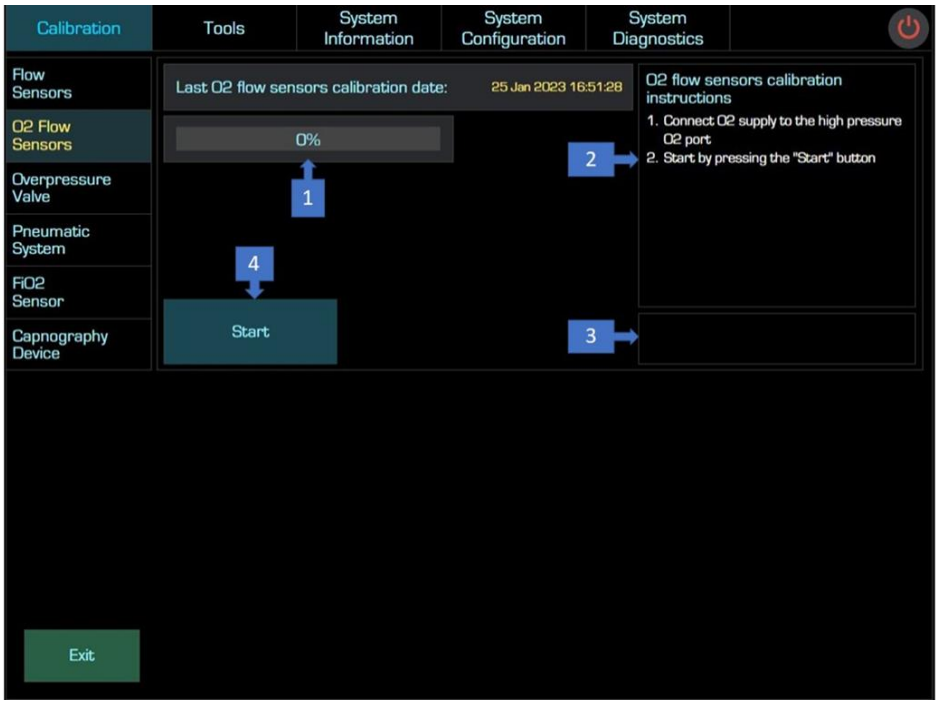

Figure 6-2: O2 Flow Sensors Calibration – Screen Description

6.1.3 Overpressure Value Calibration

This calibration is used to calibrate the Overpressure valve according to the safety requirements of ventilation standards.

1. Use 2mm Allen key to open the lock screw at the bottom of the ventilator.
2. Press the start button (4)
3. Use needle-nose pliers to close or open the Overpressure valve until the outlet pressure (1) measurement is in the green range
4. Press the Stop button (4)
5. Close the lock screw by using the Allen key
6. Press the Over Pressure Value Verification button (8)
7. Verify that the Verification prosses passed.

Table 6-3: Calibration / Overpressure Value– Screen Description

Item No.	Name	Description
1	Outlet Pressure	Graphical display of the outlet pressure: • Red range – pressure is out of tolerance. • Green range – pressure is within the tolerance.
2	Instructions Window	Provides a step-by-step instruction in order to perform the verification procedure.
3	Result Window	Provides the user a textual result of the calibration process.
4	Start Button	Used to start the calibration process.
5	Verification Outlet Pressure	Graphical display of the outlet pressure: • Red range – pressure is out of tolerance. • Green range – pressure is within the tolerance.
6	Instructions Window	Provides a step-by-step instruction in order to perform the verification procedure.
7	Result Window	Provides the user a textual result of the verification process.
8	Over Pressure Value Verification button	Used to start the verification process.
9	Progress Bar	Visual status (percentage) of verification process.

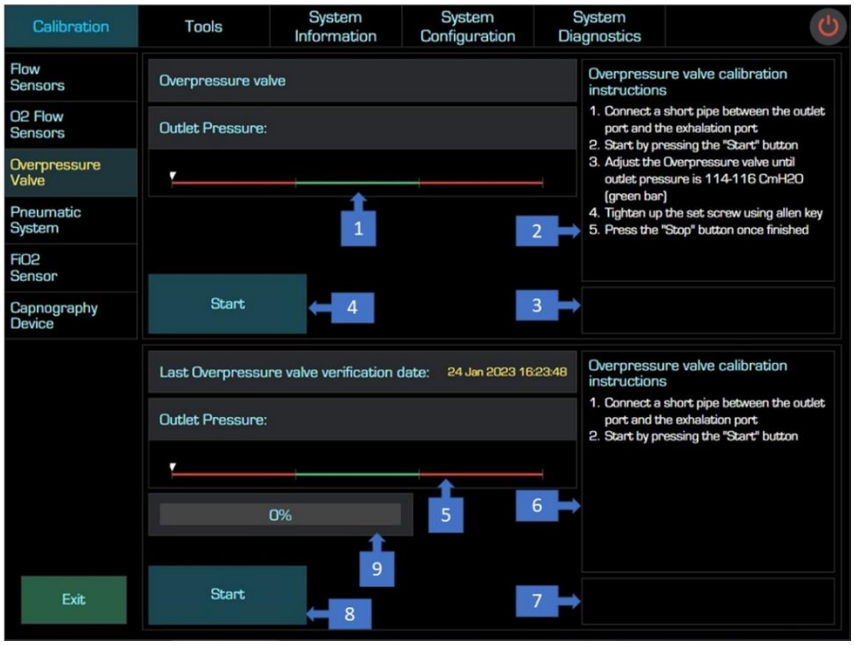

Figure 6-3: Overpressure Value Calibration - Screen Description

6.1.4 Pneumatic System Calibration

Table 6-4: Pneumatic System Calibration – Screen Description

Item No.	Name	Description
1	Progress Bar	Visual status (percentage) of verification process.
2	Instructions Window	Provides a step-by-step instruction in order to perform the verification procedure.
3	Result Window	Provides the user a textual result of the calibration process.
4	Start	Used to start the calibration process.
5	Date & Time	Shows the last Pneumatic calibration date & time.

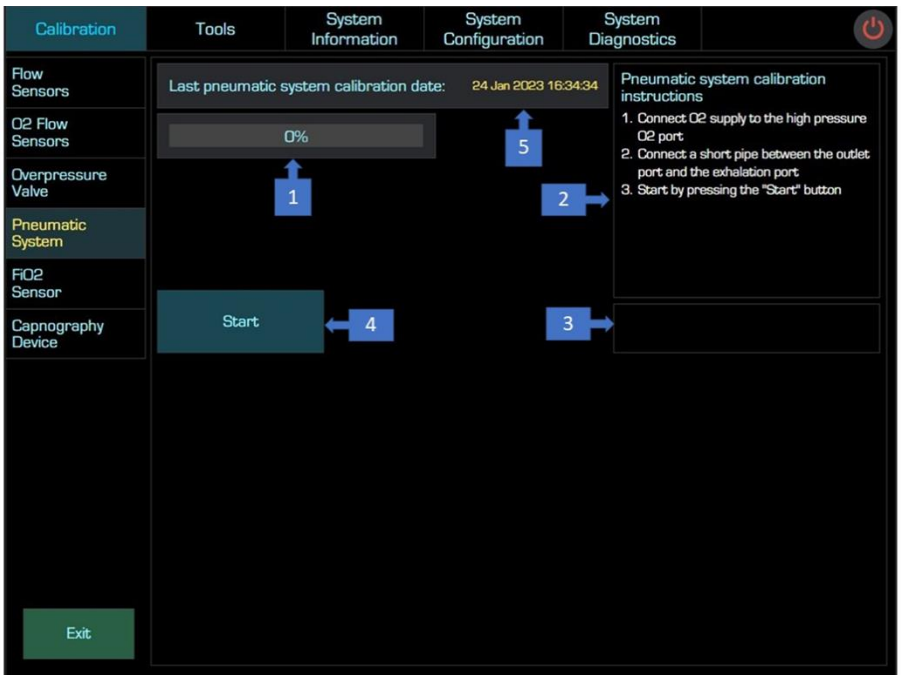

Figure 6-4: Pneumatic System Calibration – Screen Description

6.1.5 FiO2 Sensor Calibration

Fio2 sensor calibration should be done when there is a need to calibrate the Fio2 sensor that already installed in the unit by pressing the O2 Sensor Calibration button (2). If Fio2 sensor have been replaced then O2 Sensor Replacement button (4) should be pressed. After calibration, O2 Sensor Verification button (10) should be used to make sure that the calibration process was successful.

Table 6-5: FiO2 Sensor Calibration – Screen Description

Item No.	Name	Description
1	O2 Sensor Replacement date	Displays the last O2 sensor replacement date.
2	O2 Sensor Calibration button	Used to start the calibration process.
3	Progress Bar	Visual status (percentage) of calibration process.
4	O2 Sensor Replacement button	Used to start the replacement process.
5	O2 Sensor Calibration Date	Displays the last O2 sensor calibration date.
6	Instructions Window	Provides a step-by-step instruction for O2 sensor calibration.
7	Result Window	Provides the user a textual result of the calibration process.
8	Instructions Window	Provides a step-by-step instruction in order to perform the verification procedure.
9	Progress Bar	Visual status (percentage) of verification process.
10	O2 Sensor Verification button	Used to start the verification process.
11	Verification Process Result Table	Target Value – displays the desirable value. Sensor Reading – displays the measured value.

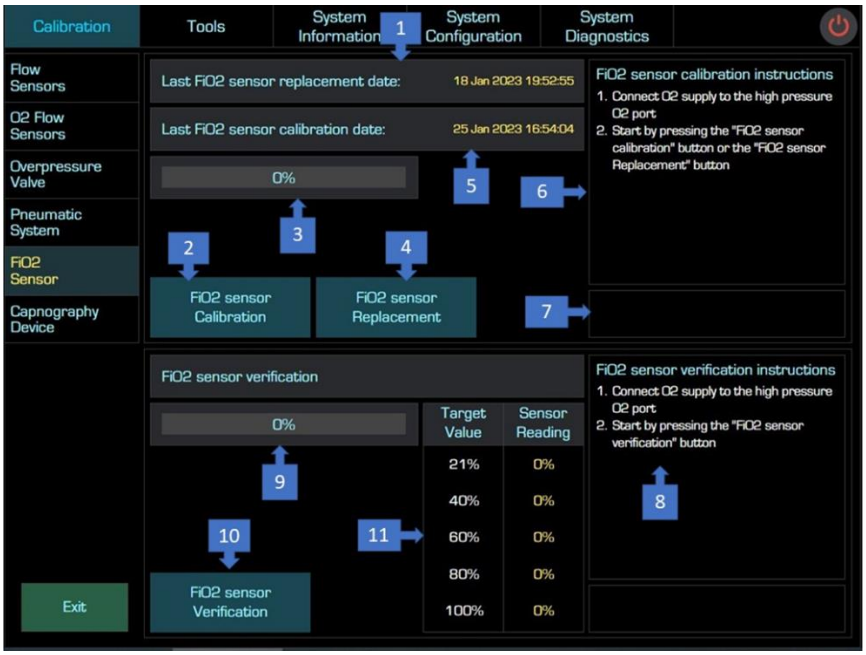

Figure 6-5: FiO2 Flow Sensors Calibrations - Screen Description

6.1.6 Capnography Device Calibration

Capnography Calibration needs to be done once a year or after 4000 operating hours, whichever comes first. A silent alarm message "CO_2 Calibration Required" will appear.

Table 6-6: Calibration / Capnography Device– Screen Description

Item No.	Name	Description
1	Progress Bar	Visual status (percentage) of calibration process.
2	Calibration Date	Displays the last calibration date.
3	Instructions window	Provides a step-by-step instruction in order to perform the calibration procedure.
4	Start calibration	Used to start the calibration process.
5	Status Window	Provides the user a status in the end of the calibration process: • Fail – red • Pass - green
6	Result Window	Provides the user a textual result of the calibration process.

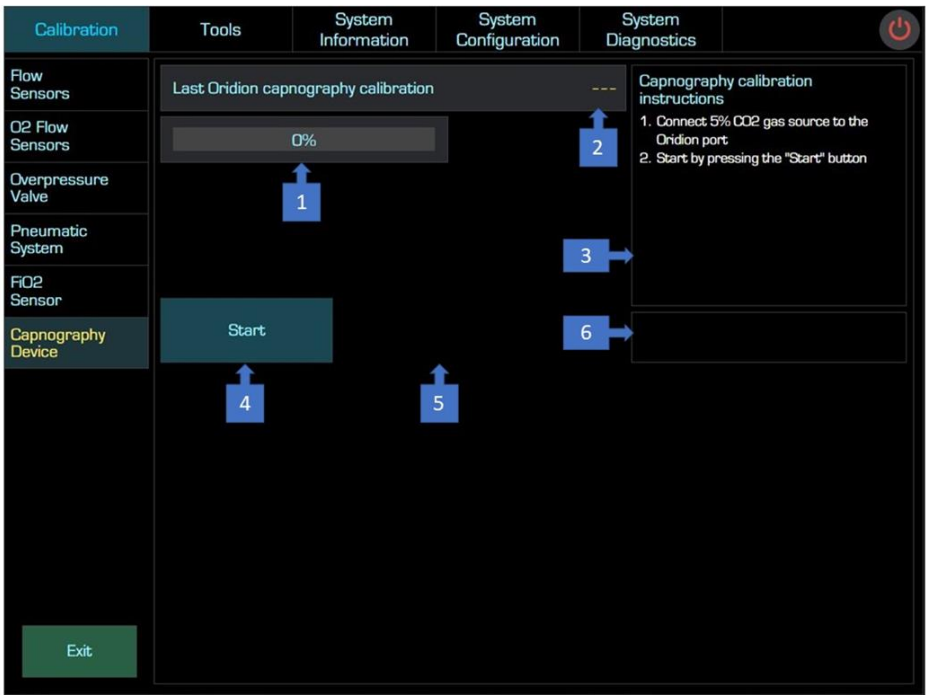

Figure 6-6: Capnography Device Calibration – Screen Description

6.2 Tools Tab

The Tools Tab composed of seven sub-tabs:

- Turbine Replacement (section 7.2.1)
- Main Board Update (section 7.2.2)
- Software Update (section 7.2.3)
- Import/Export Files (section 7.2.4)
- Factory Default (section 7.2.5)
- Touch Screen (section 7.2.6)
- Clear Logs – Production only (section 7.2.7)

6.2.1 Turbine Replacement

The Turbine Replacement is used to update the new turbine S/N after turbine replacement.

Table 6-7: Tools / Turbine Replacement – Screen Description

Item no.	Name	Description
1	New Turbine S/N	Gives the user to set the new turbine S/N after turbine replacement.
2	Num. pad	Keypad that allows the user to insert the turbine S/N.
3	Apply button	Saves the new turbine S/N and resets turbine working hours count.

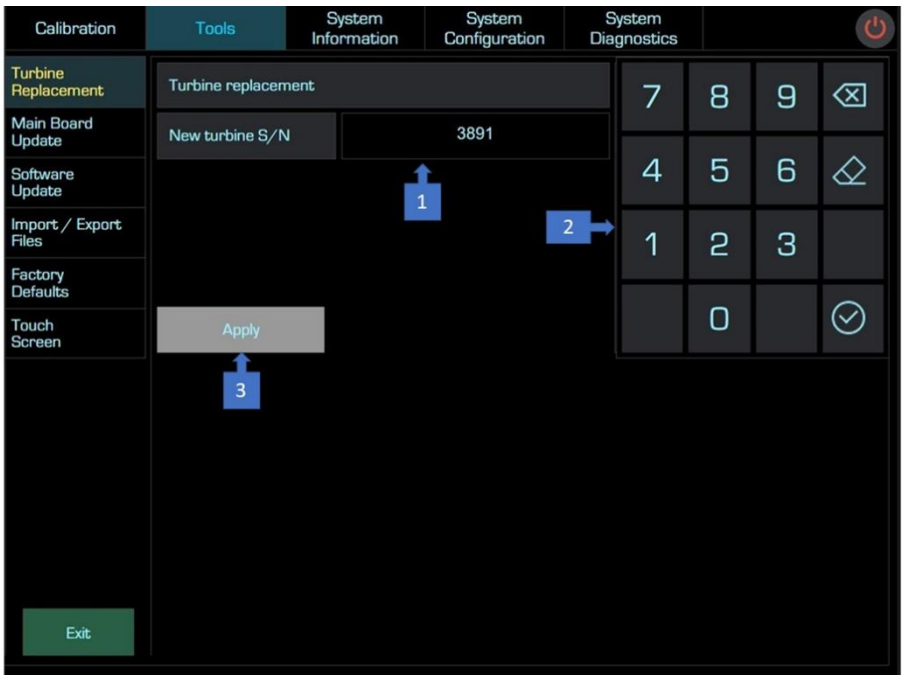

Figure 6-7: Turbine Replacement – Screen Description

6.2.2 Main Board Update

The Main Board Update screen is used to manually set Ventoux and turbine serial numbers and working hours when the main board is replaced.

Table 6-8: Tools / Main Board Update – Screen Description

Item no.	Name	Description
1	Ventilator and Turbine Serial number	Serial number information regarding the Ventilator and its Turbine.
2	Apply button	Applying the key, Turbine and ventilator working hours.
3	Key	Once entered, allows to edit the Turbine and the ventilator working hours in case the main board needs to be replaced.
4	Working hours	Show the current working hours of the Turbine and the Ventilator.
5	Keyboard	Provides an option to insert an updated working hours to the Ventilator and Turbine Data Table (1) or to enter the key to enable working hours editing.

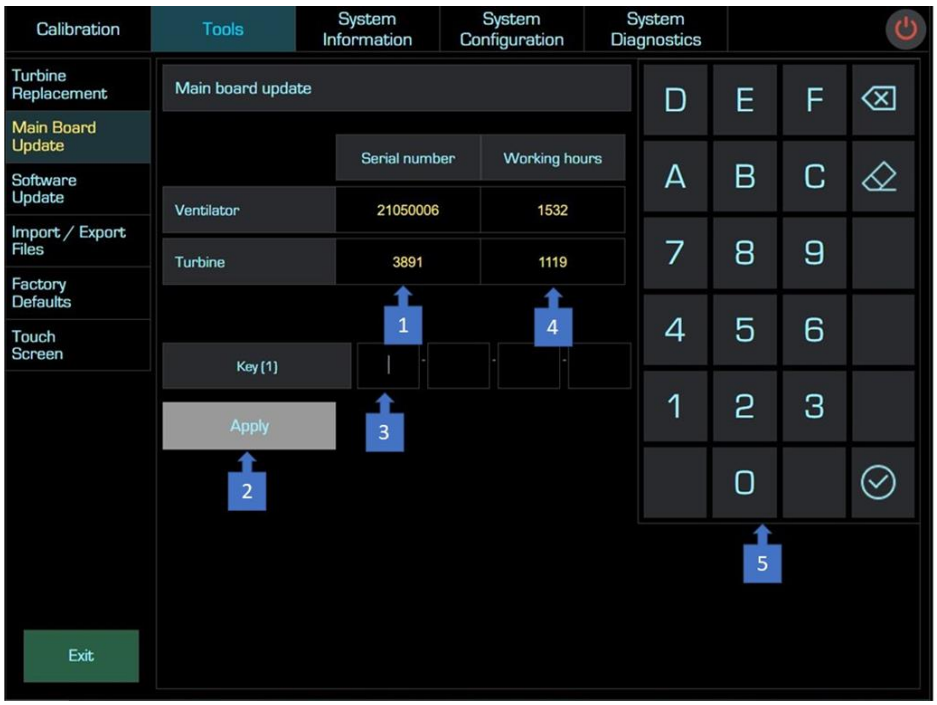

Figure 6-8: Main Board Update – Screen Description

6.2.3 Software Update

The Software Update screen is used to update Ventoux software.

> Work instructions for software burning are described in section 12.1.

Table 6-9: Tools / Software Update – Screen Description

Item No.	Name	Description
1	Current SW version	Displays the current Ventoux software version.
2	New SW version	After connecting flash drive to Ventoux USB port with a new software version, the window displays the new software version available. **Notes:** **1. Flash drive must be formatted before using.** **2. Flash drive must be inserted only after entering the service screen.** **3. System Clock must be set prior to software update according to section 6.4.3.**
3	Progress Bar	Visual status (percentage) of software update process.
4	Start button	Used to start the software update process.

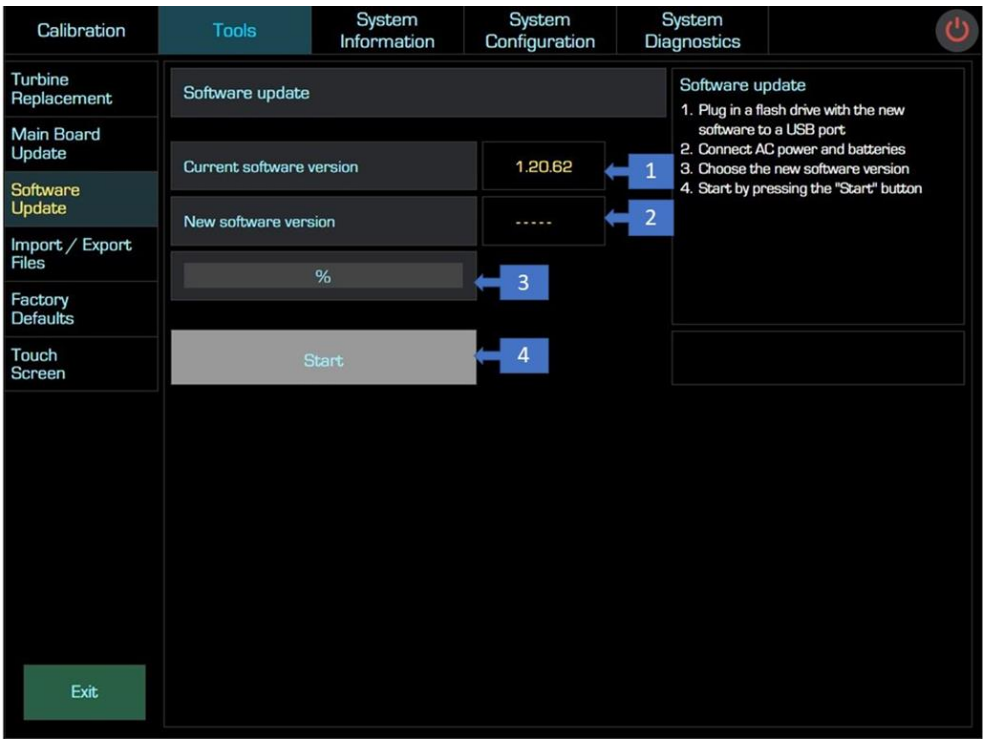

Figure 6-9: Software Update – Screen Description

6.2.4 Import / Export Files

The Import / Export Files screen is used to set factory parameters to default and download system's logs and manuals.

Table 6-10: Tools / Import / Export Files – Screen Description

Item No.	Name	Description
1	Files to export Options	Provides the user to choose what files to export by checking the relevant checkbox.
2	Instructions window	Provides a step-by-step instruction to perform the export procedure.
3	Result Window	Provides the user a textual result of the export process.
4	Progress Bar	Visual status (percentage) of export process.
5	Export Files Button	Used to start the export process.
6	File to Import Options	Provides the user to choose what files to import by checking the relevant checkbox.
7	Instructions window	Provides a step-by-step instruction to perform the import procedure.
8	Result Window	Provides the user a textual result of the import process.
9	Progress Bar	Visual status (percentage) of import process.
10	Import Files Button	Used to start the import process.

Figure 6-10: Import/Export Files – Screen Description

6.2.5 Factory Defaults

The Factory Defaults screen is used to set factory parameters to default.

Table 6-11: Tools / Factory Defaults – Screen Description

Item No.	Name	Description
1	Restore Ventilator Factory Defaults Button	Restore all factory parameters that were saved at the end of production.

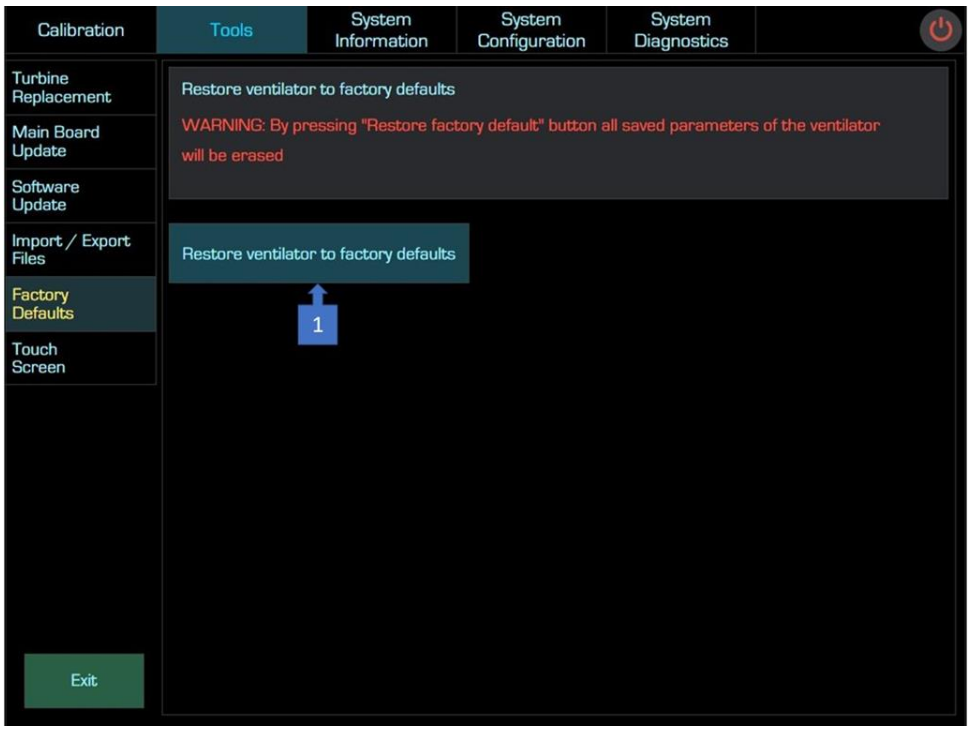

Figure 6-11: Factory Defaults – Screen Description

6.2.6 Touch Screen

The Touch Screen is used to calibrate the touch screen.

Table 6-12: Touch Screen – Screen Description

Item No.	Name	Description
1	Start Touch Calibration Button	Starts Ventoux touch screen calibration process.
2	Restore Factory Screen Calibration Button	Restore default Ventoux touch screen calibration that was saved during production.

Figure 6-12: Touch Screen – Screen Description

6.2.7 Clear Logs (Production only)

The Clear Logs screen is used to erase Ventoux logs.

Table 6-13: Clear Logs – Screen Description

Item No.	Name	Description
1	Clear Logs Button	Erase all Ventoux logs.

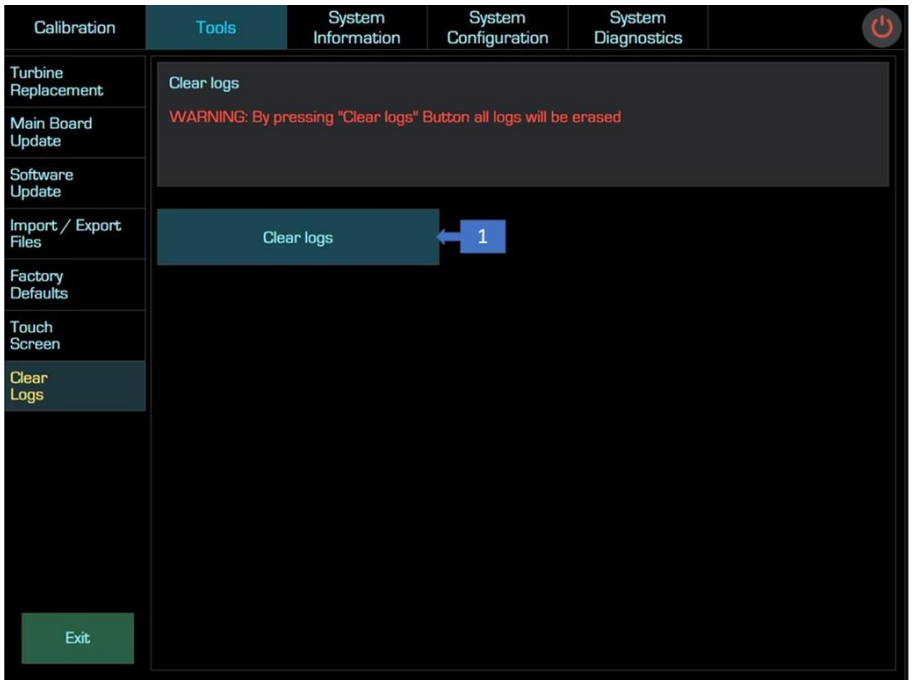

Figure 6-13: Clear Logs – Screen Description

6.3 System Information Tab

The System Information Tab is composed of two sub-tabs:

- Hardware Information (section 6.3.1)
- General Information (section 6.3.2)

6.3.1 Hardware Information

The Hardware screen displays Ventoux boards' essential data including Board name, Revision number and Serial number.

Table 6-14: System Information / Hardware Information – Screen Description

Item No.	Name	Description
1	Hardware Information	A table displays S/N and revision of Ventoux electronic boards.

Figure 6-14: Hardware Information – Screen Description

6.3.2 General Information

The General Information screen displays all Ventoux essential data.

Table 6-15: System Information / General Information – Screen Description

Item No.	Name	Description
1	System Information	A table displays ventilator and turbine S/N, software versions, working hours of the ventilator and turbine, replacement date of O2 sensor and turbine.
2	Battery 1 Information	Displays Battery 1 Information: S/N, manufacturing date, charging cycles and battery health (Ratio between current capacity and design capacity).
3	Battery 2 Information	Displays Battery 2 Information: S/N manufacturing date, charging cycles and battery health (Ratio between current capacity and design capacity).
4	Altitude Information	Displays Ventoux current altitude.
5	Calibration Information	Displays last calibration dates performed to Ventoux system.

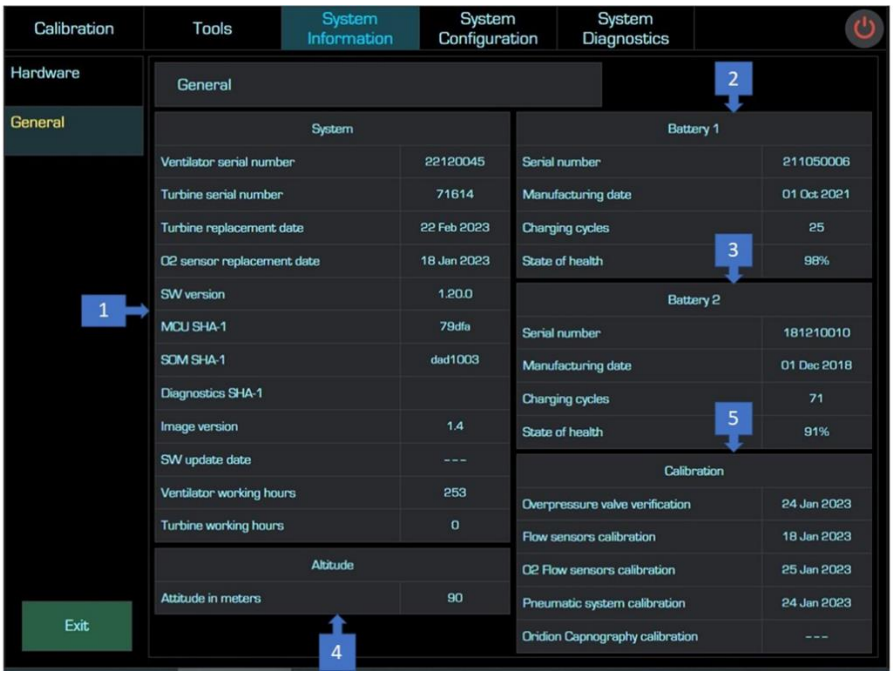

Figure 6-15: General Information – Screen Description

6.4 System Configuration Tab

The System Configuration Tab composed of seven sub-tabs:

- Language (section 6.4.1)
- Altitude (section 6.4.2)
- System Clock (section 6.4.3)
- Ethernet (section 6.4.4)
- Wi-Fi (Optional) (section 6.4.5)
- Hardware (production only) (section 6.4.6)
- Additional Features (section 6.4.7)

6.4.1 Language

The Language screen is used to change the user interface language.

Table 6-16: System Configuration / Language – Screen Description

Item No.	Name	Description
1	Language Options	Provides the user an option to choose the user interface language.
2	Apply Button	Apply the user interface language chosen in the Language Option (1).

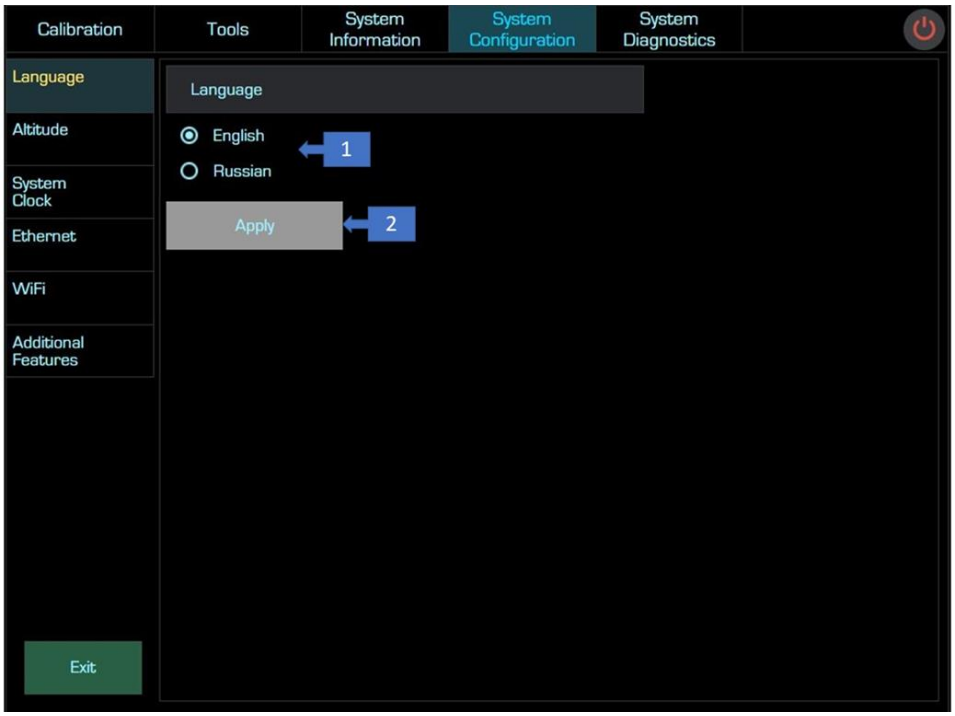

Figure 6-16: Language – Screen Description

6.4.2 Altitude

The Altitude Configuration screen is used to set altitude mode to Automatic or manual. When set to manual, the altitude can be set. In Automatic mode you can see the current altitude measured by the ventilator and the atmospheric pressure.

Table 6-17: System Configuration / Altitude– Screen Description

Item No.	Name	Description
1	Altitude Value Source	Automatic – the altitude measured from internal barometric sensor. Manual - the altitude supplied to the Ventoux manually in the Altitude window (2).
2	Altitude / Barometric Pressure Value	Automatic- Display the Altitude in meters and the barometric pressure. Manual- manual entry of the Altitude.
3	Apply Button	Saves the current settings: Manual/Automatic and the manual altitude value inserted (2).

It is always recommended, even when selecting automatic altitude, to set the manual altitude value for the case of a barometer fault.

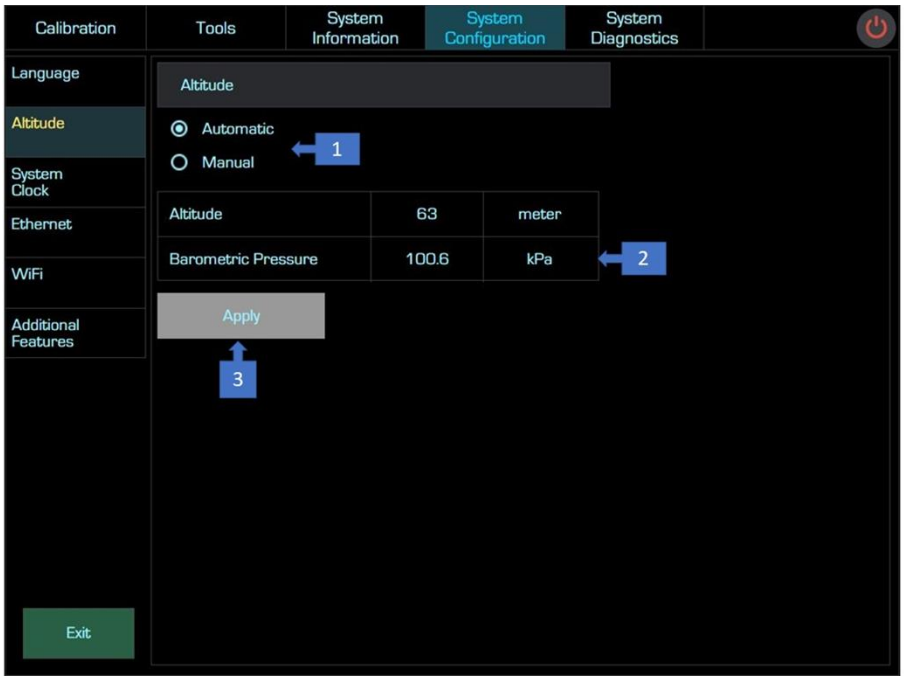

Figure 6-17: Altitude Configuration – Screen Description

6.4.3 System Clock

The System Clock screen is used to update the date and time of Ventoux.

Table 6-18: System Configuration / System Clock – Screen Description

Item No.	Name	Description
1	Time	Provides the user to set the time manually.
2	Apply Button	Saves time and date.
3	Date	Provides the user to set the date manually.
4	Time Format	Provides the user the option to work in 12- or 24-hourly format.

In case time and date update fails, replace the battery assembled on the Main Board according to section 8.1.7.

or when date and time cannot be updated

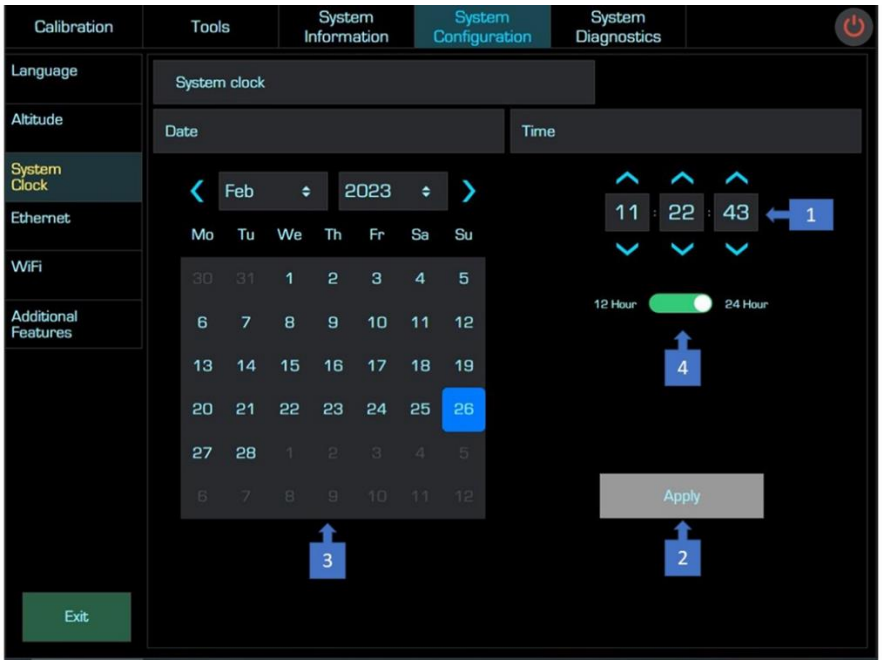

Figure 6-18: System Clock Setup – Screen Description

6.4.4 Ethernet

The Ethernet Configuration screen is used to set Ventoux Ethernet configuration parameters and to see the network information.

WARNING

Due to cyber security issues the device must be connected to the intra-hospital network only!

Accessing the internet in forbidden.

The facility network administrator should take all necessary steps to avoid un-authorize persons from accessing the facility intranet.

Table 6-19: System Configuration / Ethernet – Screen Description

Item No.	Name	Description
1	IP Address Source	Provides the user an option to choose an automatic or manually IP address (Use the following IP).
2	IP Address Table	Provides the user an option of manually setting the IP address when manual IP address chosen
3	Apply Button	Saves the user IP address that sets in IP Address Table (2).
4	Network Information	Network information about IP address, Subnet mask and default Gateway address.

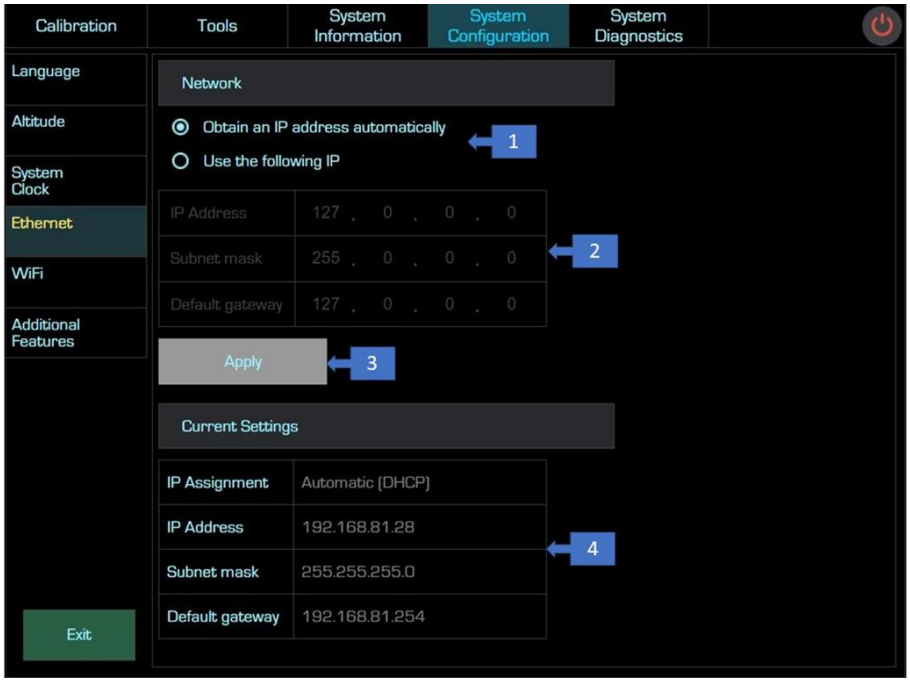

Figure 6-19: System Clock Setup – Screen Description

6.4.5 WIFI (When available)

The WIFI Configuration screen is used to set Ventoux WIFI configuration parameters and to see the network information.

WARNING

Due to cyber security issues the device must be connected to the intra-hospital network only!

Accessing the internet in forbidden.

The facility network administrator should take all necessary steps to avoid un-authorize persons from accessing the facility intranet.

Table 6-20: System Configuration / WIFI – Screen Description

Item No.	Name	Description
1	Toggle switch	Controls the WIFI ON/Off toggle switch.
2	Network name	Provides the name of connected WIFI network, if connected.
3	Networks drop down menu	Lists all the available WIFI networks.
4	Password	Enables the user to insert the WIFI network password.
5	IP Address Source	Provides the user an option to choose an automatic or manually IP address.
6	IP Address Table	Provides the user an option of manually setting the IP address.
7	Apply Button	Saves the user IP address that sets in IP Address Table.
8	Saved networks	Lists all the saved connected WIFI networks with their applied passwords.
9	Delete Button	Deletes saved connected WIFI networks.

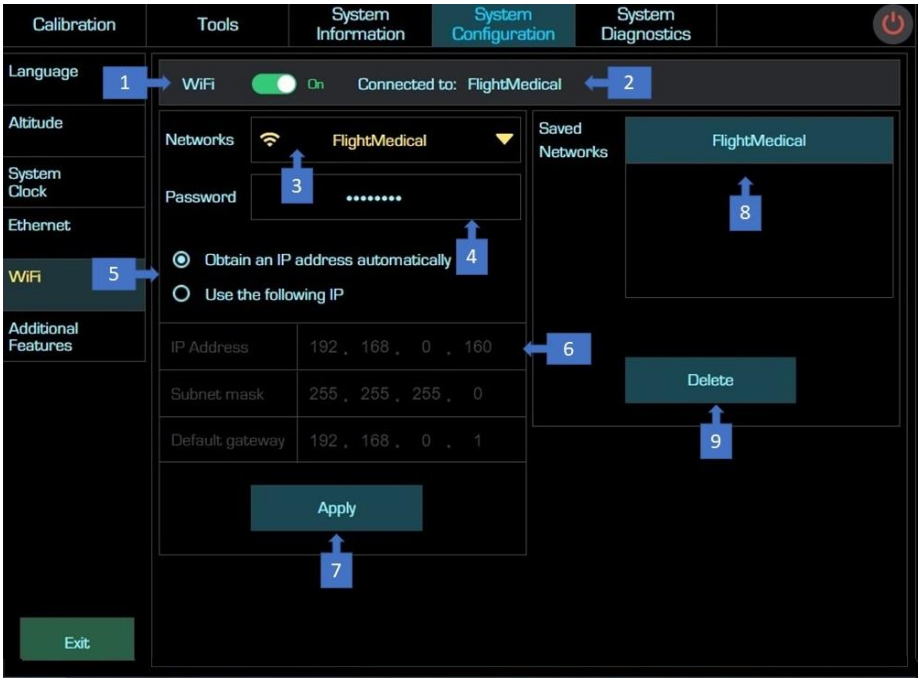

Figure 6-20: WIFI Configuration – Screen Description

6.4.6 Hardware (Production Only)

The Hardware Configuration screen is used to modify Ventoux boards' revision and serial number during production.

Table 6-21: System Configuration / Hardware Configuration – Screen Description

Item No.	Name	Description
1	Hardware Configuration Table	Board Name – Ventoux board's name. Revision – Ventoux board's revision. Serial Number - Ventoux board S/N. <u>Note:</u> The user can change the parameter only where Edit icon exists (Production only)
2	Apply Button	Saves the manually settings inserted to Hardware table (1).

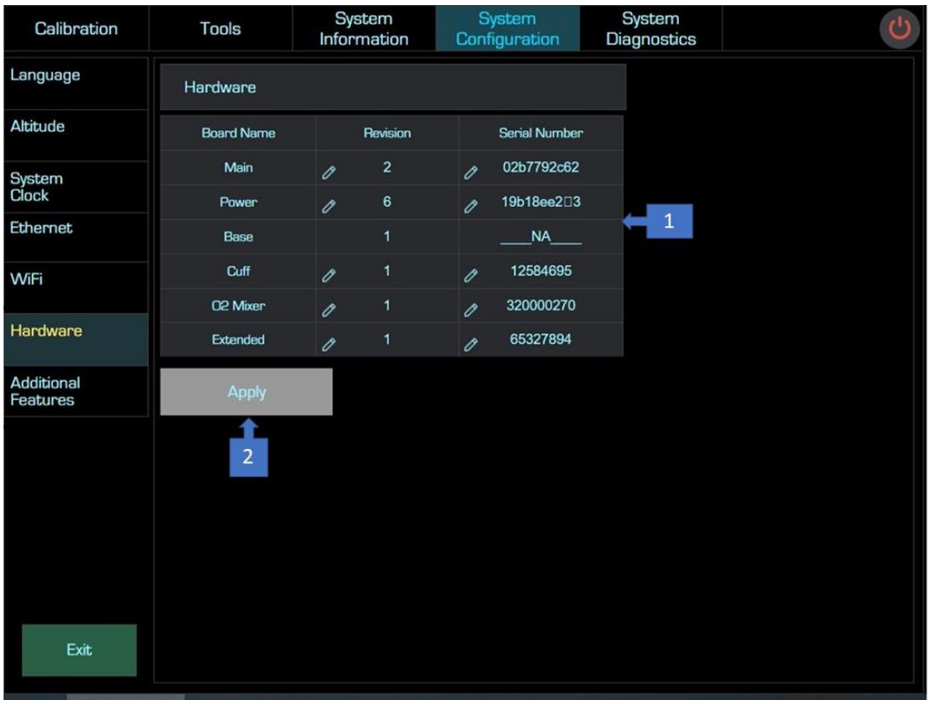

Figure 6-21: Hardware Configuration – Screen Description

6.4.7 Additional Features

Additional features are used to enable SW features on the Ventoux. Each feature can be enabled by entering a unique key containing 20 characters and/or digits. When pressing the empty box, a keypad will be open allowing the user to enter the key.

For features that are enabled, an “Active” status will be displayed.

Table 6-22: System Configuration / Additional Features – Screen Description

Item No.	Name	Description
1	Key	Empty boxes for entering the Key supplied by Flight Medical.
2	Status	Shows if the feature is active and deactivate feature button.
3	Apply Button	Apply button to activate the keys and get conformation that the key is correct.
4	Rest Of The World / US Only	Territory based software configuration

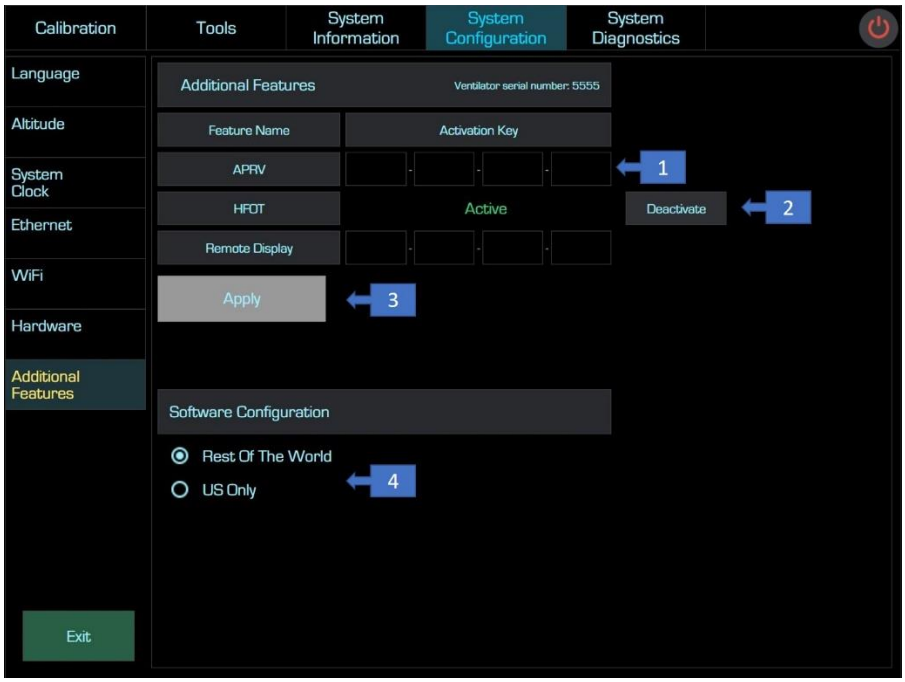

Figure 6-22: Additional Features - Screen Description

6.5 Diagnostics

6.5.1 Start Diagnostic

The Diagnostics screen used to perform tests to the Ventoux machine.

Table 6-23: System Diagnostics – Screen Description

Item No.	Name	Description
1	Start	Gets you in the Diagnostics screen after pressing "Start Diagnostics".

Figure 6-23: Start Diagnostics - Screen Description

6.5.2 Diagnostics Screen

Table 6-24: Diagnostics – Screen Description

Item No.	Name	Description
1	Test progress indication	Provides a visual indication of test progress: • Running test progress – indication of current test progress. • Overall progress – indication of the overall tests progress.
2	Log Display	Radio buttons to filter tests result indication: • All – displays all tests results in the log list. • Pass – displays only the "Pass" tests. • Fail - displays only the "Fail" tests.
3	Log list	Displays the tests name and description and provides Pass (green) / Fail (red) indication according to the selection in the Log Display radio buttons (2).
4	Connected / Disconnected indication	Provides an indication of connection to MCU.
5	Exit	Exits from Diagnostics screen back to Service screen.
6	Reset	Clears all the selected tests in the Test Tree (9).
7	Stop	Stops the current test procedure.
8	Run	Starts the selected tests in the Test Tree (9).
9	Test Tree	Provides the option of specific test selection.
10	Sort By	Radio buttons that sort the tests by: • Components – sorts the Test Tree (9) by sub-components. • Automatic/Manual – sorts the Test Tree (9) by an automatic and manual test. • Electrical / Pneumatic. • A-Z - Alphabetic order.

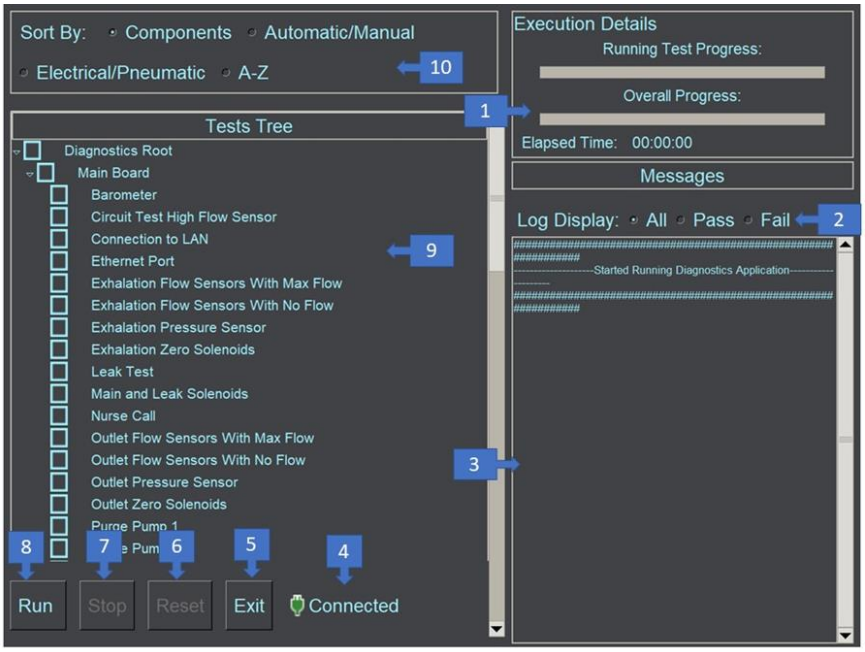

Figure 6-24: Diagnostics Screen Description (1 of 3)

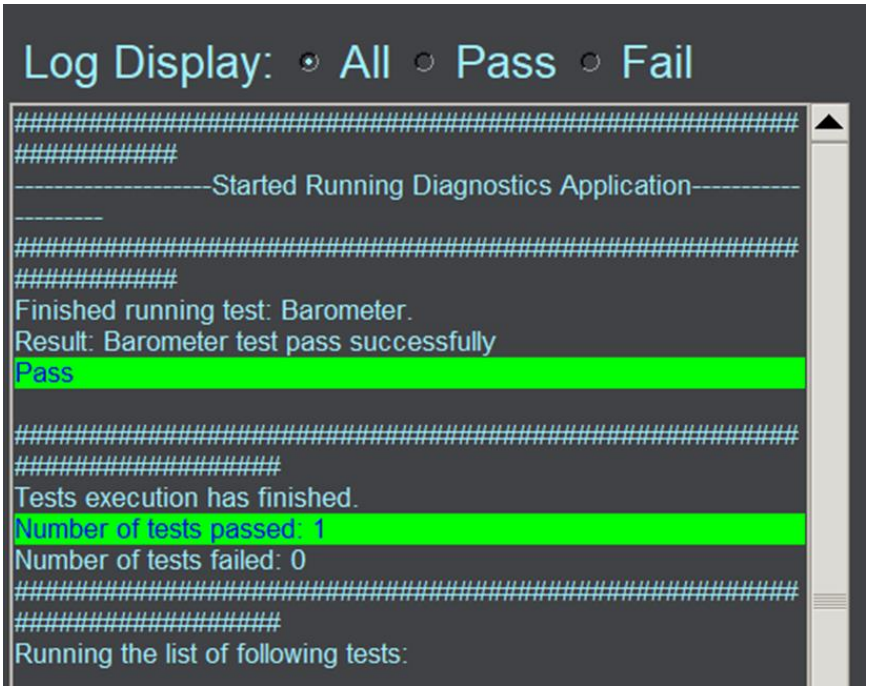

Figure 6-25: Diagnostics Screen Description (2 of 3)

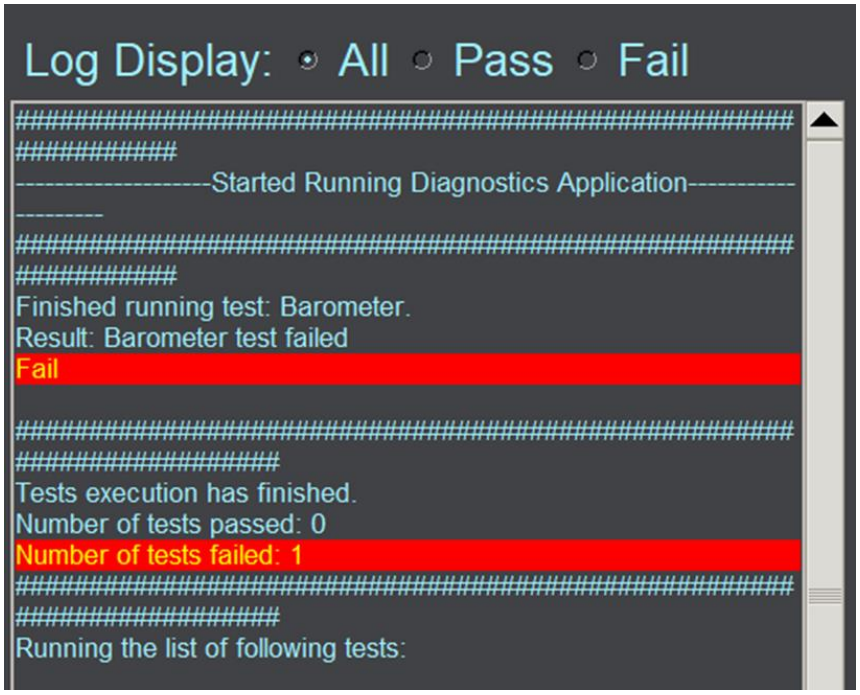

Figure 6-26: Diagnostics Screen Description (3 of 3)

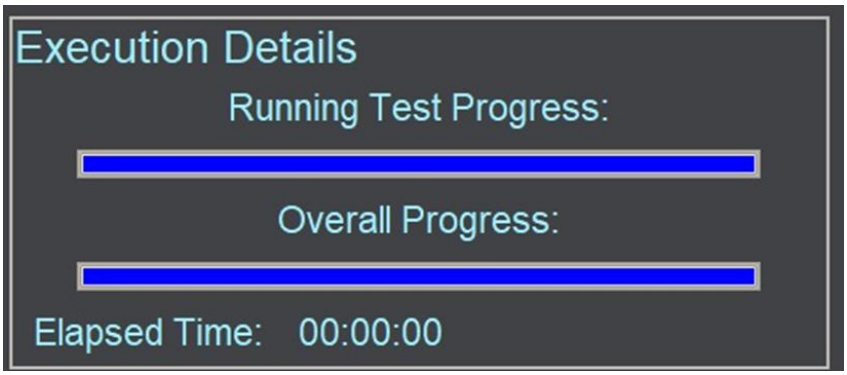

Figure 6-27: Diagnostics Progress Bar

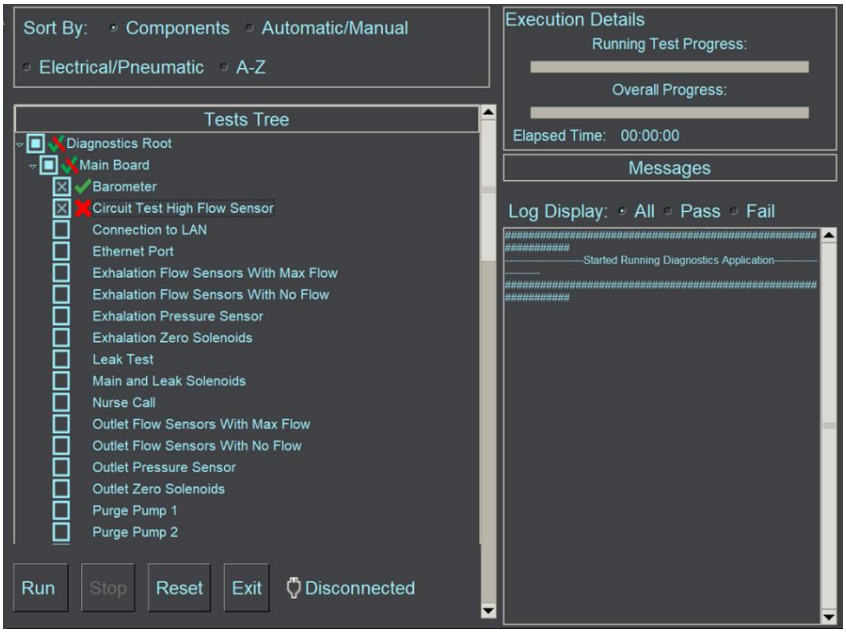

Figure 6-28: Test Selection and results

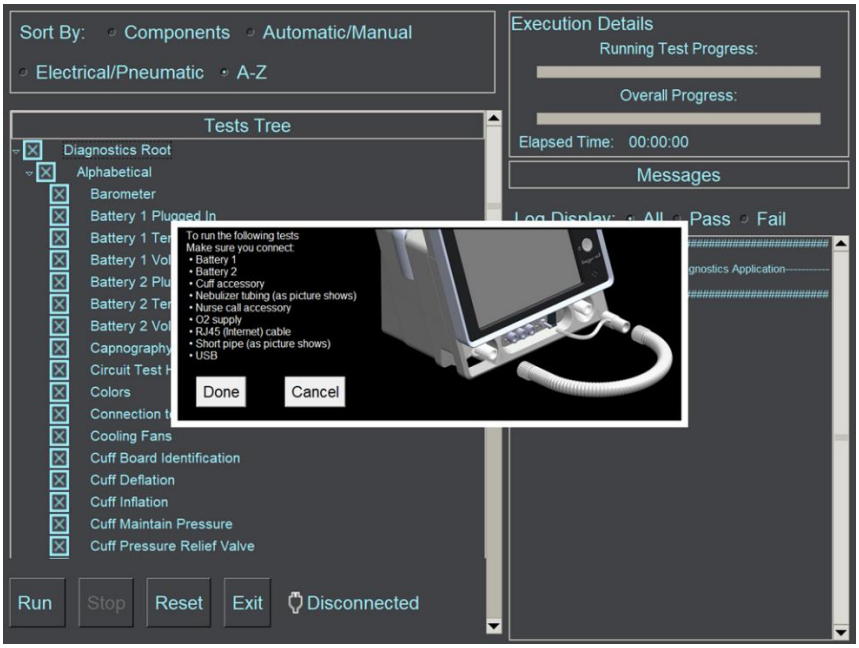

Figure 6-29: Diagnostic pop-up message example

6.5.3 Tests Tree

Table 6-25: Tests Tree

Components	Test	Pneumatic /Electrical	Automatic /Manual	Comments
Alarm Board	Red LEDs	E	A	
	Yellow LEDs	E	M	
Battery Housing Board	Battery 1 Plugged In	E	A	
	Battery 1 Temperature	E	A	
	Battery 1 Voltage	E	A	
	Battery 2 Plugged In	E	A	
	Battery 2 Temperature	E	A	
	Battery 2 Voltage	E	A	
Front Board	Lower Speaker	E	A	
	Upper Speaker	E	A	
	On/Off Button	E	M	
	Silence Button	E	M	
Display Board	Colors	E	M	
	Frame	E	M	Production Only
	Pixels	E	M	
O2 Mixer Board	Nebulizer	P	A	
	O2 Flow Sensors with Max Flow	P	A	
	O2 Flow Sensors with No Flow	E	A	
	O2 Mixer Board Identification	E	A	
	O2 Mixer Pressure	P	A	
	O2 Zero Solenoids	P	A	
Main Board	Barometer	E	A	
	Circuit Test High Flow Sensor	P	A	
	Connection To LAN	E	A	
	Ethernet Port	E	A	
	Exhalation Flow with Max Flow	P	A	

Components	Test	Pneumatic /Electrical	Automatic /Manual	Comments
	Exhalation Flow with No Flow	E	A	
	Exhalation Pressure Sensor	P	A	
	Exhalation Zero Solenoid	P	A	
	Leak Test	P	A	
	Nurse Call	E	M	Production Only
	FiO2 Sensor Identification	E	A	
	Outlet Flow with Max Flow	P	A	
	Outlet Flow with No Flow	E	A	
	Outlet Pressure Sensor	P	A	
	Outlet Zero Solenoids	P	A	
	Purge Pump 1	P	A	
	Purge Pump 2	P	A	
	SOM Temperature	E	A	
	USB Port 0	E	A	
	USB Port 1	E	A	
	USB Port 2	E	A	Production Only
	USB Ports	E	A	
Power Board	Main and Leak Solenoids	P	A	
	Maneuver Pump	P	A	
	Watchdog	E	A	
	Turbine	P	A	
	Turbine Break	P	A	
Cuff Board	Cuff Board Identification	E	A	Available only when cuff board exists
	Cuff Deflation	P	A	
	Cuff Inflation	P	A	
	Cuff Maintain Pressure	P	A	
	Cuff Pressure Relief Valve	P	A	
	Cuff Sensor	E	A	

Components	Test	Pneumatic /Electrical	Automatic /Manual	Comments
Miscellaneous	Capnography Identification	E	A	
	Cooling Fans	E	A	
	SOM Fan	E	A	
	Safety Fan	E	A	
	SpO2 Identification	E	A	
	Threeway Valve	P	A	

6.5.4 Tests Description

> Manual test is based on the user feedback. In this case, the test result, pass/fail, depends on the user response.

Table 6-26: Tests Description

Component	Diagnostics Test	Automatic/ Manual	Test General Description	Corrective Action
Alarm Board	Red LEDs	Automatic	LED's functionality	1. <u>If at least one red LED is not working:</u> • Replace Front & Alarm boards (SUB-0476) (section 8.1.9). 2. <u>If no red LED is working:</u> • Check Front - Base cable connection (section 8.1.31). 3. <u>If all red LEDs are working and still Red LED's diagnostics test fail</u>, replace: • Main Board (SUB-0268) (section 8.1.7). 4. <u>Replace</u>: • Alarm – Front board (SUB-0476) (section 8.1.9). • Base – Front Cable (CBL-0106) (section 8.1.31Top Cover Installation7). • Main Board (SUB-0268) (section 8.1.7). • Base Board (ELA-0032) (section 8.1.29).
	Yellow LEDs	Manual	LED's functionality	1. <u>If at least one yellow LED is not working:</u> • Replace Front & Alarm boards (SUB-0476) (section 8.1.9). 2. <u>If no yellow LEDs are working:</u> • Check Front - Base cable connection (section 8.1.31). 3. <u>Replace</u> • Alarm – Front board (SUB-0476) (section 8.1.9). • Base – Front Cable (CBL-0106) (section 8.1.31Top Cover Installation7). • Main Board (SUB-0268) (section 8.1.7). • Base board (ELA-0032) (section 8.1.29).
Battery Housing Board	Battery 1&2 Plugged In	Automatic	Batteries Status	1. Make sure battery 1 is connected. 2. Make sure Battery 1 - base cable is connected (CBL-0104). 3. <u>Replace</u>: • Battery 1 (SUB-0267) (section 8.1.34). • Battery 1- Base cable (CBL-0104). • Power Board (SUB-0281) (section 8.1.4). • Base board (ELA-0032) (section 8.1.29).
	Battery 1&2 Temperature	Automatic	Battery Temperature within normal range	<u>Replace</u>: • Battery 1 (SUB-0267) (section 8.1.34). • Power Board (SUB-0281) (section 8.1.4).

Component	Diagnostics Test	Automatic/ Manual	Test General Description	Corrective Action
	Battery 1&2 Voltage	Automatic	Battery voltage within normal range	Replace: • Battery 1 (SUB-0267) (section 8.1.34). • Power Board (SUB-0281) (section 8.1.4).
Front Board	Lower Speaker	Automatic	Speaker functionality	1. Make sure speaker is connected. 2. Base Board – Front Cable (CBL-0106) (section 8.1.31Top Cover Installation7). 3. Replace: • Speaker (SUB-0269/SUB-0325) (section 8.1.11) • Alarm – Front board (SUB-0476) (section 8.1.9). • Base Board– Front Cable (CBL-0106) (section 8.1.31Top Cover Installation7). • Main Board (SUB-0268) (section 8.1.7). • Base Board (ELA-0032) (section 8.1.29).
	Upper Speaker	Automatic	Speaker functionality	1. Make sure speaker is connected. 2. Base Board – Front Cable (CBL-0106) (section 8.1.31Top Cover Installation7). 3. Replace: • Speaker (SUB-0269/SUB-0325) (section 8.1.11). • Alarm – Front board (SUB-0476) (section 8.1.9). • Base Board– Front Cable (CBL-0106) (section 8.1.31Top Cover Installation7). • Main Board (SUB-0268) (section 8.1.7). • Base Board (ELA-0032) (section 8.1.29).
	Silence Button	Manual	Button functionality	1. Make sure Base - front cable is connected (CBL-0106) 2. Replace: • Base Board– Front Cable (CBL-0106) (section 8.1.31Top Cover Installation7). • Alarm – Front board (SUB-0476) (section 8.1.9). • Main Board (SUB-0268) (section 8.1.7). • Base Board (ELA-0032) (section 8.1.29).
	On/Off Button	Manual	Button functionality	1. Make sure Base Board– Front Cable (CBL-0106) (section 8.1.31Top Cover Installation7). 2. Replace: • Base Board– Front Cable (CBL-0106) (section 8.1.31Top Cover Installation7). • Alarm – Front board (SUB-0476) (section 8.1.9). • Main Board (SUB-0268) (section 8.1.7). • Base Board (ELA-0032) (section 8.1.29).
Display Board	Pixels	Manual	Screen Pixels	Replace: • LCD screen LCD-0009 / LCD-0010 (section 8.1.35). • LVDS cable (CBL-0092) (section 8.1.10). • Display Board (ELA-0037) (section 8.1.30). • SOM (SOM-0001 / SOM-0002). • Main Board (SUB-0268) (section 8.1.7).
	Colors	Manual	Screen Colors	Replace: • LCD screen LCD-0009 / LCD-0010 (section 8.1.35). • LVDS cable (CBL-0092) (section 8.1.10). • Display Board (ELA-0037) (section 8.1.30). • SOM (SOM-0001 / SOM-0002). • Main Board (SUB-0268) (section 8.1.7).

Component	Diagnostics Test	Automatic/ Manual	Test General Description	Corrective Action
	Frame	Manual	Screen position within the front panel frame	Align the screen to the screen frame
O2 Mixer Board	O2 Flow Sensors with Max Flow	Automatic	O2 flow sensors functionality using O2 supply	1. Make sure Green & Clear tubes from O2 Mixer board to the O2 FLT are properly connected from both sides. 2. Check O2 supply pressure. 3. Make sure you have O2 supply connected to the O2 regulator at the back of the ventilator. 4. Replace: • O2 Mixer board (SUB-0249) (section 8.1.18). • Main Board (SUB-0268) (section 8.1.7). • Base Board (ELA-0032) (section 8.1.29).
O2 Mixer Board	O2 Flow Sensors with no Flow	Automatic	O2 flow sensors functionality	1. Make sure that O2 supply is connected to the O2 high pressure regulator at the back of the ventilator and the pressure is higher than 2 bar. 2. Make sure the VSO-MAX solenoid on the O2 Mixer is connected to the O2 Mixer board and all wires are well soldered (SUB-0263) 3. Check proper connection between two tubes from the O2 FLT and O2 Mixer board - pay attention to the tubes position. 4. Replace: • VSO-MAX solenoid (SUB-0263) (section 8.1.15). • O2 Mixer board (SUB-0249) (section 8.1.18). • Main Board (SUB-0268) (section 8.1.7). • Base Board (ELA-0032) (section 8.1.29).
	O2 Mixer Identification	Automatic	Connection to Base Board	1. Make sure O2 board is properly inserted to the Base Board. 2. Replace: • O2 Mixer board (SUB-0249) (section 8.1.18). • Main Board (SUB-0268) (section 8.1.7). • Base Board (ELA-0032) (section 8.1.29).
	O2 Mixer Pressure	Automatic	O2 mixer pressure sensor functionality	1. Make sure that O2 supply is connected to the O2 high pressure regulator at the back of the ventilator and the pressure is higher than 2 bar. 2. Make sure the high-pressure sensor on the O2 Mixer is connected to the O2 Mixer board and all wires are well soldered. 3. Replace: • High pressure sensor (CBL-0129) (section 8.1.17) • O2 Mixer board (SUB-0249) (section 8.1.18). • Main Board (SUB-0268) (section 8.1.7). • Base Board (ELA-0032) (section 8.1.29).

Component	Diagnostics Test	Automatic/ Manual	Test General Description	Corrective Action
	O2 Zero Solenoids	Automatic	O2 zero solenoids functionality	1. Make sure that O2 supply is connected to the O2 high pressure regulator at the back of the ventilator and the pressure is higher than 2 bar. 2. Check proper connection between two tubes from the O2 FLT and O2 Mixer board - pay attention to the tubes position. 3. Replace: • O2 Mixer board (SUB-0249) (section 8.1.18).
O2 Mixer Board	Nebulizer	Automatic	Tests the O2 flow at the outlet Nebulizer port	1. Make sure that O2 supply is connected to the O2 high pressure regulator at the back of the ventilator and the pressure is higher than 2 bar. 2. Make sure that the SRS- solenoid is connected to the O2 Mixer board and all wires are well soldered. 3. Replace: • O2 Mixer board (SUB-0249) (section 8.1.18). • Internal O2 mixer (SUB-0473) (section 8.1.13) • Main Board (SUB-0268) (section 8.1.7). • Base Board (ELA-0032) (section 8.1.29).
Main Board	Barometer	Automatic	Barometer component functionality	Replace: • Main Board (SUB-0268) (section 8.1.7).
	Outlet Flow Sensors with Max Flow	Automatic	Outlet flow sensors functionality using the turbine	1. Make sure Red & Blue tubes from Main Board to Outlet FLT are properly connected from both ends. 2. Make sure turbine outlet pipe is properly connected to the Outlet FLT. 3. Make sure there is no air blockage in the ventilator inlet. 4. Replace: • Main Board (SUB-0268) (section 8.1.7).
	Outlet Flow Sensors with no Flow	Automatic	Outlet low and high flow sensors functionality	1. Make sure Red & Blue tubes from Main board to Outlet FLT are properly connected from both sides. 2. Make sure turbine outlet is properly connected to the Outlet FLT. 3. Make sure there is no air blockage in the ventilator inlet. 4. Replace: • Main Board (SUB-0268) (section 8.1.7).
	Outlet Pressure Sensor	Automatic	Outlet pressure sensor functionality by creating pressure from the turbine	1. Make sure Red & Blue pipes from Main board to Outlet FLT are properly connected from both sided 2. Replace: • Main Board (SUB-0268) (section 8.1.7).

Component	Diagnostics Test	Automatic/ Manual	Test General Description	Corrective Action
	Outlet Zero solenoids	Automatic	Outlet Zero solenoids functionality	1. Make sure Red & Blue pipes from Main board to Outlet FLT are properly connected from both sides. 2. Replace: • Main Board (SUB-0268) (section 8.1.7).
	Exhalation Flow sensors with Max Flow	Automatic	Exhalation flow sensors functionality using the turbine	1. Make sure Yellow & White pipes from Main board to 3WV are properly connected from both ends. 2. Make sure that the Yellow & White pipes from the 3WV are properly connected to the Exhalation valve ports. 3. Make sure that 3WV circuit connector is not connected to the 3WV. 4. Make sure turbine outlet is properly connected to the Outlet FLT. 5. Make sure there is no air blockage in the ventilator inlet. 6. Replace: • Main Board (SUB-0268) (section 8.1.7).
	Exhalation Flow sensors No Flow	Automatic	Exhalation low and high flow sensors functionality	1. Make sue Yellow & White pipes from Main board to 3WV are properly connected from both sides. 2. Make sure that the Yellow & White pipes from the 3WV are properly connected to the Exhalation valve ports. 3. Make sure that 3WV circuit connector is not connected to the 3WV. 4. Make sure turbine outlet is properly connected to the Outlet FLT. 5. Make sure no air blockage in the ventilator inlet. 6. Replace: • Main Board (SUB-0268) (section 8.1.7).
	Exhalation pressure sensor	Automatic	Testing the Exhalation pressure sensor by creating pressure using the turbine	1. Make sure Yellow & White pipes from Main board to 3WV are properly connected from both sides. 2. Replace: • Main Board (SUB-0268) (section 8.1.7).
	Exhalation Zero solenoid	Automatic	Exhalation pressure sensor functionality by creating pressure from the turbine	1. Make sure Yellow & White pipes from Main board to 3WV are properly connected from both sides. 2. Replace: • Main Board (SUB-0268) (section 8.1.7).

Component	Diagnostics Test	Automatic/ Manual	Test General Description	Corrective Action
	Circuit Test High Flow Sensor	Automatic	Exhalation low flow sensor functionality by using low air flow from the turbine	1. Make sure grey pipe from Main board to Exhalation Valve is properly connected from both sides. 2. Make sure turbine outlet is properly connected to the Outlet FLT. 3. Make sure no air blockage in the ventilator inlet. 4. Replace: • Main Board (SUB-0268) (section 8.1.7).
Main Board	FiO2 Sensor Identification	Automatic	FiO2 Sensor connection to Main Board	1. Make sure O2 Cable is connected between the O2 Sensor and Main Board (CBL-0108) 2. Replace: • O2 Cable (CBL-0108). • O2 Sensor (G60-25000-29) (section 8.1.20) • Main Board (SUB-0268) (section 8.1.7).
	Purge pump 1	Automatic	Tests purge pump 1 tubing connections and functionality	1. Replace: • Main Board (SUB-0268) (section 8.1.7).
	Purge pump 2	Automatic	Tests purge pump 2 tubing connections and functionality	1. Replace: • Main Board (SUB-0268) (section 8.1.7).
	Ethernet Port	Automatic	Existence of Ethernet connection	1. Make sure Internet cable is connected. 2. Replace: • SOM (SOM-0001/SOM-0002). • Main Board (SUB-0268) (section 8.1.7).
	Connection to LAN	Automatic	Ability to get a network IP address	1. Make sure Internet cable is connected 2. Replace: • SOM (SOM-0001/SOM-0002). • Main Board (SUB-0268) (section 8.1.7).
	USB Ports	Automatic	Ability to identifies all USB ports	1. Replace: • SOM (SOM-0001/SOM-0002). • Main Board (SUB-0268) (section 8.1.7).
	USB Port 0/1/2	Automatic	Connection of a USB device	1. Make sure a USB device is connected to any of USB ports 2. Replace: • SOM (SOM-0001/SOM-0002). • Main Board (SUB-0268) (section 8.1.7).
	SOM Temperature	Automatic	SOM temperature reading	1. Make sure heat sink is properly installed with thermal sticker and the heat sink is properly mounted to the SOM. 2. Check if SOM fan is working. 3. Replace: • Main Board (SUB-0268) (section 8.1.7).

Component	Diagnostics Test	Automatic/ Manual	Test General Description	Corrective Action
	Nurse Call	Manual	tests the nurse call relay on the main board using external device	1. Make sure Nurse Call check device is properly connected. 2. Replace: • Main Board (SUB-0268) (section 8.1.7).
Power Board	Main & Leak solenoids	Automatic	Main & Leak solenoids functionality	1. Make sure purple pipe from Power Board to 3WV and from 3WV to membrane port are properly connected. 2. Make sure orange pipe from Power to outlet FLT is properly connected. 3. Make sure the membrane exists and placed well in the exhalation base. 4. Replace: • Power Board (SUB-0281) (section 8.1.4).
	Maneuver pump	Automatic	Exhalation membrane closure	1. Make sure purple pipe from Power board to ventilator membrane is properly connected from both sides and that there is no air leak, if possible. 2. Replace: • Power Board (SUB-0281) (section 8.1.4). • Main Board (SUB-0268) (section 8.1.7).
	Watchdog	Automatic	Watchdog functionality by generating audio and visual alarms	1. Replace: • Power Board (SUB-0281) (section 8.1.4).
	Turbine	Automatic	Turbine rotation	1. Make sure that the Turbine cable to Power board is properly connected. 2. Replace: • Blower Assy (SUB-0248) (section 8.1.23). • Power Board (SUB-0281) (section 8.1.4). • Main Board (SUB-0268) (section 8.1.7). • Base board (ELA-0032) (section 8.1.27.58.1.31).
	Turbine break	Automatic	Turbine break control	1. Replace: • Power Board (SUB-0281) (section 8.1.4). • Blower Assy (SUB-0248) (section 8.1.23).
Cuff Board	Cuff Board Identification	Automatic	Connection to the Extended Board	1. Check if Cuff Board is properly connected to the Extended board. 2. Check if Extended Board is properly inserted to the Base board. 3. Replace: • Cuff Board (SUB-0474) (section 8.1.8). • Extended Board (ELA-0031) (section **Error! R eference source not found.**). • Main Board (SUB-0268) (section 8.1.7). • Base board (ELA-0032) (section 8.1.27.58.1.31).

Component	Diagnostics Test	Automatic/ Manual	Test General Description	Corrective Action
	Cuff Deflation	Automatic	Deflation of Cuff unit	1. Check if Cuff Board is properly connected to the Extended board. 2. Check that Extended is properly inserted to the Base board. 3. Replace: • Cuff Board (SUB-0474) (section 8.1.8). • Extended Board (ELA-0031) (section **Error! Reference source not found.**). • Main Board (SUB-0268) (section 8.1.7). • Base board (ELA-0032) (section 8.1.27.58.1.31).
	Cuff Inflation	Automatic	Inflation of Cuff unit	1. Check if Cuff Board is properly connected to the Extended board. 2. Check that Extended is properly inserted to the Base board. 3. Make sure tube from CUFF board to the front panel is properly connected. 4. Replace: • Cuff Board (SUB-0474) (section 8.1.8). • Extended Board (ELA-0031) (section **Error! Reference source not found.**). • Main Board (SUB-0268) (section 8.1.7). • Base board (ELA-0032) (section 8.1.27.58.1.31).
	Cuff Maintain Pressure	Automatic	Pressure maintaining by cuff system	1. Check if Cuff Board is properly connected to the Extended board. 2. Check that Extended is properly inserted to the Base board. 3. Replace: • Cuff Board (SUB-0474) (section 8.1.8). • Extended Board (ELA-0031) (section **Error! Reference source not found.**). • Main Board (SUB-0268) (section 8.1.7). • Base board (ELA-0032) (section 8.1.27.58.1.31).
	Cuff Pressure Relief Valve	Automatic	Pressure relief on the Cuff board	1. Make sure Pressure relief valve exists and connected to the board in the right direction. 2. Replace: • Cuff Board (SUB-0474) (section 8.1.8).
	Cuff Sensor	Automatic	Cuff pressure sensor functionality	1. Check if Cuff Board is properly connected to the Extended board. 2. Check that Extended is properly inserted to the Base board. 3. Replace: • Cuff Board (SUB-0474) (section 8.1.8). • Extended Board (ELA-0031) (section **Error! Reference source not found.**). • Main Board (SUB-0268) (section 8.1.7). • Base board (ELA-0032) (section 8.1.27.58.1.31).

Component	Diagnostics Test	Automatic/ Manual	Test General Description	Corrective Action
Miscellaneous	Capnography Identification	Automatic	Capnography modules connection to Base Board	1. In case of Oridion: • Make sure internal Oridion module is properly connected to Base Board. • Make sure Oridion module's tubes and cables are properly connected to the Oridion connector mounted on the front panel of the Ventoux. 2. Replace: • Oridion capnography Cable (CBL-0110) (section 8.1.26.58.1.27) • Oridion Capnography Module (SUB-0451) (section 8.1.28). • Base board (ELA-0032) (section 8.1.27.58.1.31). 3. In case of Philips: • Make sure Philips internal cable is connected to the Base Board. • Make sure external Philips capnography module is connected to the front panel of the Ventoux. 4. Replace: • Philips Capnography cable (CBL-0111) (section 8.1.26). • Base board (ELA-0032) (section 8.1.27.58.1.31).
	Cooling Fans	Automatic	Cooling fans functionality	1. Make sure cooling fans connector is properly connected to Base board. 2. Replace: • Power supply module (SUB-0258) (section 8.1.21). • Main Board (SUB-0268) (section 8.1.7). • Power Board (SUB-0281) (section 8.1.4). • Base board (ELA-0032) (section 8.1.27.58.1.31).
	Safety Fan	Automatic	Safety fan functionality	1. Make sure cooling fans connector is properly connected to Base Board. 2. Replace: • Power supply module (SUB-0258) (section 8.1.21). • Main Board (SUB-0268) (section 8.1.7). • Power Board (SUB-0281) (section 8.1.4). • Base board (ELA-0032) (section 8.1.27.58.1.31).
	SOM Fan	Automatic	SOM fan functionality	1. Make sure fan is connected to base board. 2. Replace: • SOM Fan (CBL-0256). • Main Board (SUB-0268) (section 8.1.7). • Base board (ELA-0032) (section 8.1.27.58.1.31).

Component	Diagnostics Test	Automatic/ Manual	Test General Description	Corrective Action
	SPO2 Identification	Automatic	Connection of SPO2 PCBA to Extended Board	1. Make sure SpO2 cable is properly connected to SPO2 PCBA. 2. Make sure Nellcor PCBA is properly connected to Extended Board. 3. Make sure Extended board is properly inserted to the Base board. 4. Replace: • SPO2 cable (CBL-0126) (section 8.1.33). • Nellcor SPO2 PCBA (SUB-0310) (section 8.1.6) • Extended Board (ELA-0031) (section **Error! R eference source not found.**). • Base board (ELA-0032) (section 8.1.27.58.1.31).
	Three-Way Valve	Automatic	3WV functionality	1. Check all 3WV tubes connections. 2. look for leakage, missing parts or un-screw nuts. 3. Replace: • Three-way valve (SUB-0261) (section 8.1.24)
	Leak Test	Automatic	Pressure relief valve functionality	1. Make sure Pressure relief valve is calibrated in the service screen/tools. 2. Make sure turbine is working and creating pressure. 3. Make sure tube between turbine and outlet FLT is properly connected. 4. Replace: • Outlet Assy (SUB-0253) (section 8.1.32).

7 Preventive Maintenance

Preventive maintenance ensures that the equipment is in optimal condition and performs as required. The primary goal of preventive maintenance is to avoid or minimize the consequences of equipment failure. Preventive maintenance consists of activities performed at predefined frequency and intervals.

Table 7-1: Preventive Maintenance

Item No.	Interval	Action
1	Check the filter's condition whenever servicing the ventilator	Replace Filter according to section 7.1
2	Annually	Replace Oxygen Sensor according to section 8.1.20
3	Every 3 years or 500 Charging Cycles or State of Health lower than 85%	Replace Battery according to section 8.1.34.
4	Every 20,000 working hours	Replace Blower according to section 8.1.23.
5	Every 5 years	Replace Button Battery CR1225-3V (Assembled on Main Board) according to section 8.1.7
6	Every 3 years	Replace Blower One Way Valve Cassette according to section 8.1.25.
7	Every 3 years	Replace Exhalation Valve according to section 8.1.12.
8	Every 3 years	Replace Dual Limb Diaphragm Silicone according to section 8.1.20.

In Storage			
1		While batteries are in storage: 1. When batteries are on the shelf over a period of more than 3 months, make sure to charge them to 40% once a year. 2. When batteries are inside the device, connect the device to an AC power supply in order to keep the batteries fully charged and ready for use at all times. 3. When batteries are inside the device and no AC power supply is available, make sure to charge the batteries to 100% every 4 months. While batteries are in use: Keep the device connected to an external power supply as much as possible in order to keep the batteries fully charged and ready for use.	Charge batteries according to section 7.2

7.1 Filter Replacement

7.1.1 Safety

See Clause 2

7.1.2 Tools and Equipment

N/A

7.1.3 Removal

1. Manually release two captive screws (3) that attach Filter Cover (4) to the Ventoux machine.
2. Remove Filter Cover (4) from Ventoux machine.
3. Remove the Inlet Filter (1) from the Ventoux machine.

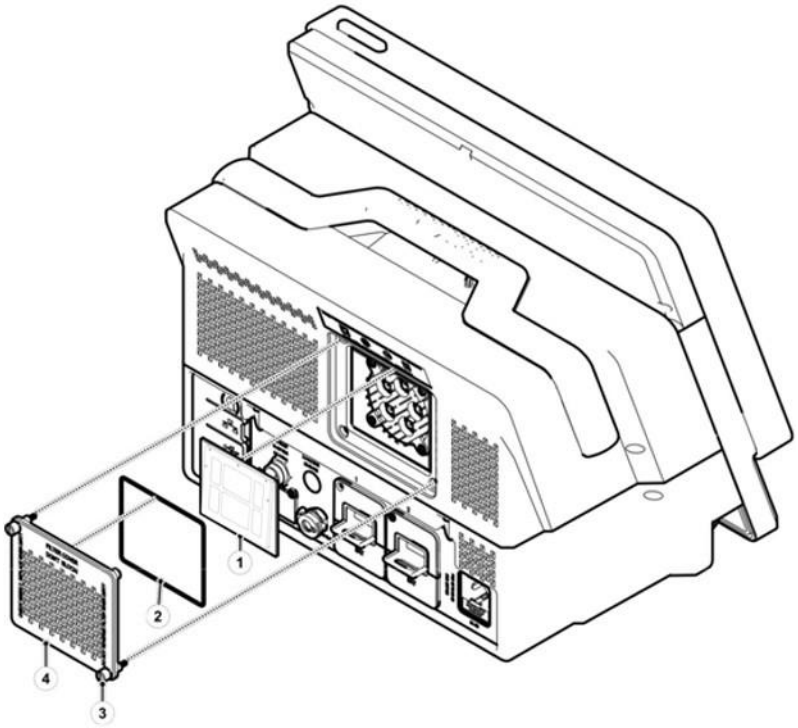

Figure 7-1: Filter Removal and Installation

7.1.4 Installation

1. Remove a new Inlet Filter (1) from its package.
2. Visually inspect Filter Cover Gasket (2) for lack of damages (if required replace the Gasket).
3. Locate the new Inlet Filter (1) in its place.
4. Locate the Filter Cover (4) in its place on the Inlet Filter (1).
5. Manually, tighten two captive screws (3) that attach Filter Cover (4) to the Ventoux machine.

7.2 Battery Charging

7.2.1 Safety

See clause 2

7.2.2 Tools and Equipment

N/A

7.2.3 Preparations

Power up Ventoux machine without entering the Service screen (see Clause 6).

7.2.4 Procedure

1. Verify that AC indication (1) is lit.
2. Verify that battery level indications contain lightening symbol (charging).

3. When battery indications (2) show 100% turn off Ventoux machine.

Figure 7-2: Battery Charging

8 Corrective Maintenance

Corrective maintenance is carried out after a failure has been detected. The goal of corrective maintenance is to correct a failure so that the unit/equipment can be restored to an operational state.

The corrective maintenance is divided into three main stages:

1. Ventoux test running according see section 6.5.
2. Troubleshooting according to section 6.5.46.5.4.
3. Corrective action according to section 8.

8.1 Components Replacement

WARNING

Before replacement procedure read carefully the safety instructions (see Clause 2).

This section provides a step-by-step instruction for all Ventoux replaceable components.

8.1.1 8” and 12” Top Cover Replacement

8.1.1.1 Safety

See clause 2

8.1.1.2 Tools and Equipment

- Philips screwdriver
- Component P/N: KIT-0075

8.1.1.3 Top Cover Removal

> The removal procedure for Top Cover is identical in both 8” and 12” Ventoux configurations.

1. Remove filter cover by unscrewing 2 screws (6), manually.
2. Remove Inlet Air Filter.
3. Using Philips screwdriver, remove two long Philips-head screws (4) from both Ventoux body sides.
4. Using Philips screwdriver, remove one short Philips-head screw (5) from top Ventoux body.
5. Using Philips screwdriver, remove two Philips-head screws (3) from bottom Ventoux cover (1).
6. Remove the cover (1) from Ventoux body (2).

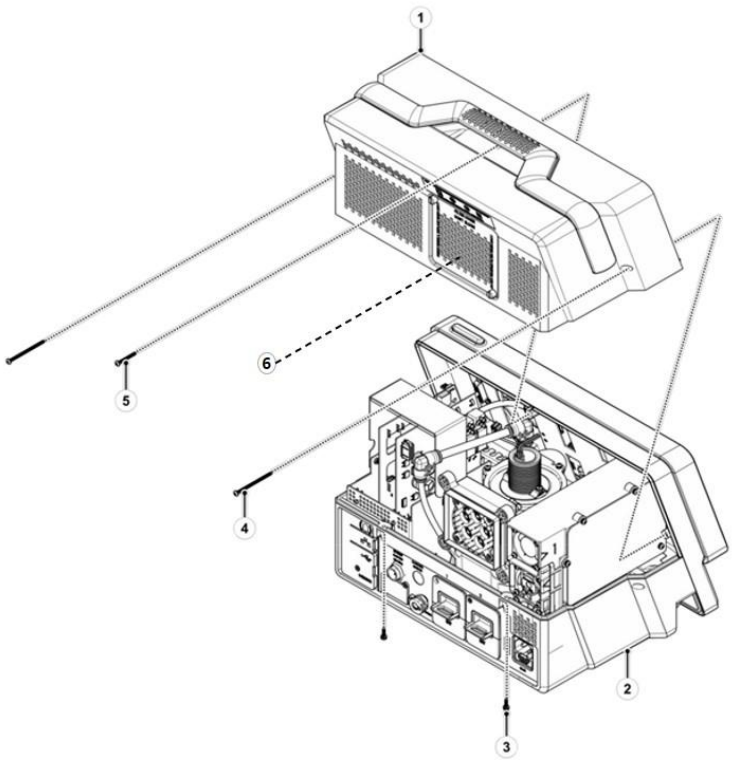

Figure 8-1: Top Cover Replacement

8.1.1.4 Top Cover Installation

> The removal procedure for Top Cover is identical in both 8” and 12” screens.

1. Gently position the cover (1) in its place.
2. Using Philips screwdriver, install two long Philips-head screws (4) on both Ventoux body sides.
3. Tighten screws (4) to torque of 8 lb.-in.
4. Using Philips screwdriver, install one short Philips-head screw (5) on both Ventoux body sides.
5. Tighten screw (5) to torque of 8 lb.-in.
6. Using Philips screwdriver, install two Philips-head screws (3) on bottom Ventoux cover (1).
7. Tighten screws (3) to torque of 8 lb.-in.
8. Place inlet air filter.
9. Install filter cover by manually screwing 2 screws on back of the Ventoux.

8.1.1.5 Return to Service

N/A.

8.1.2 8” and 12” Front Replacement

8.1.2.1 Safety

See clause 2

8.1.2.2 Tools and Equipment

- Philips screwdriver
- Component P/N: KIT-0071/2

8.1.2.3 Removal - Bottom and Sides

The removal procedure for Front is identical in both 8” and 12” screens.

1. Remove Top Cover according to section 8.1.1.
2. Using Philips screwdriver, remove four bottom Philips screws (2) that attach Front Assy (1) to the Ventoux body (3).
3. Using Philips screwdriver, remove two side Philips screws (4) that attach Front Assy (1) to the Ventoux body (3).

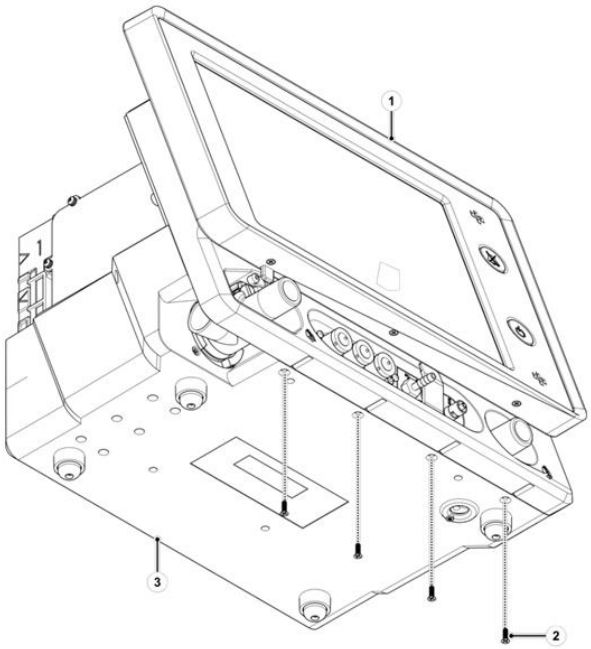

Figure 8-2: 12" Front Removal (1 of 3)

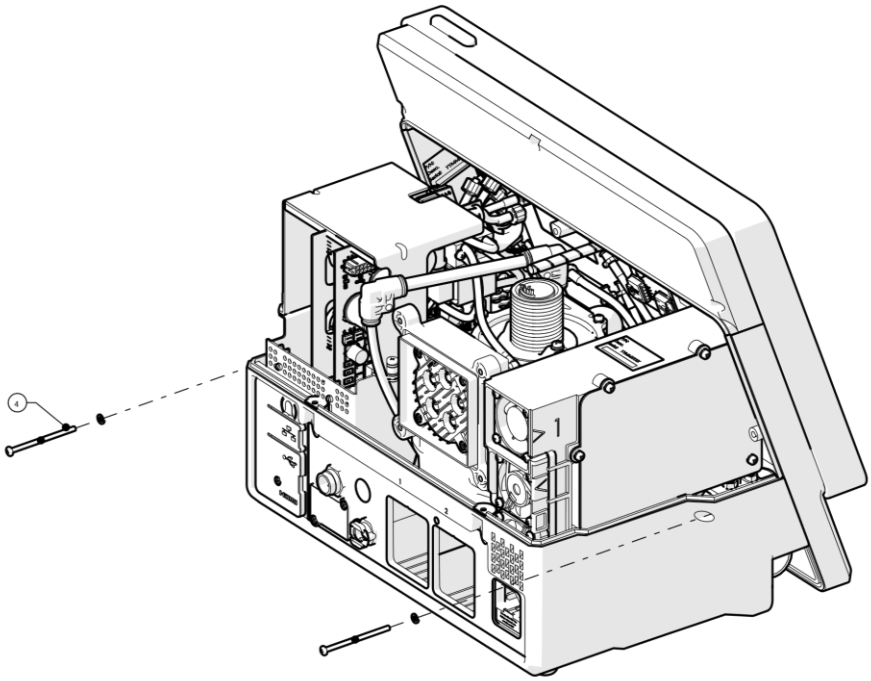

Figure 8-3: 12" Front Removal (2 of 3)

8.1.2.4 Removal – Upper Side

1. Disconnect CBL-0092 two connectors (1) and (6) from MB Assy. connectors (3) and (4).
2. Disconnect CBL-0106 connector (5) from Display Board connector.
3. Gently detach Front (1) from Ventoux body.

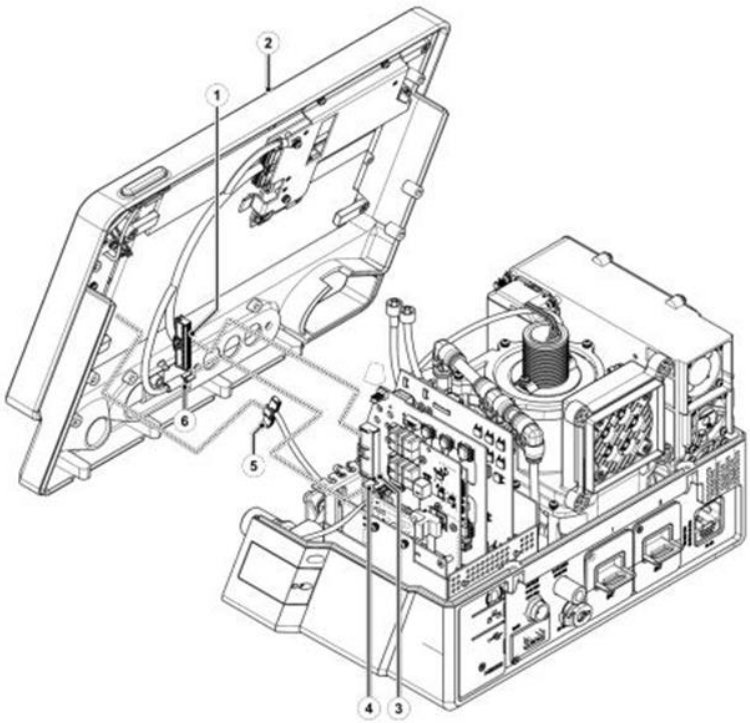

Figure 8-4: 12" Front Removal (3 of 3)

8.1.2.5 Installation – Upper Side

> The removal procedure of Front is identical in both 8” and 12” screens.

1. Gently attach 8” or 12” Front panel (1) to Ventoux body.
2. Connect CBL-0106 connector (5) to Display Board connector.
3. Connect CBL-0092 two connectors (1) and (6) to MB Assy. connectors (3) and (4).

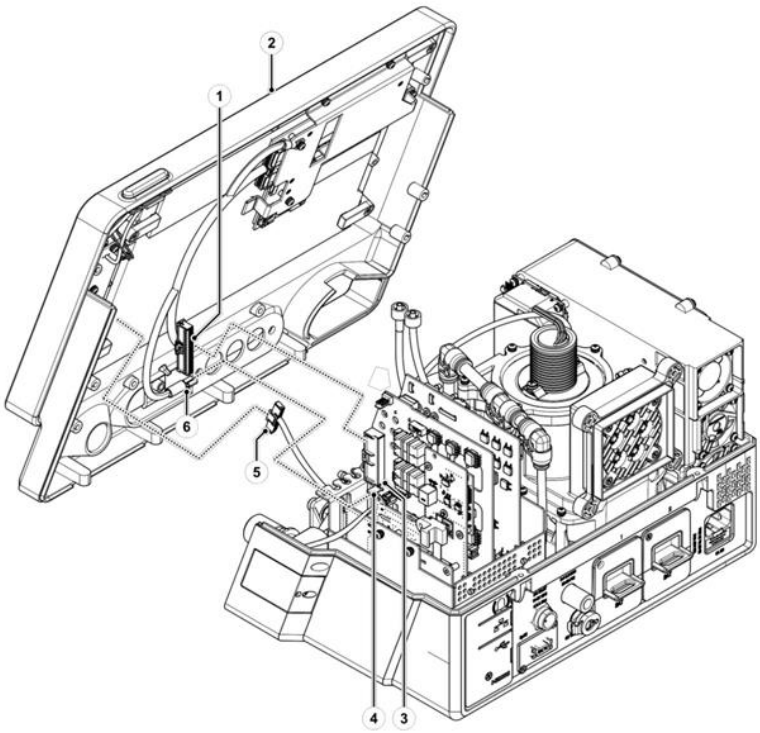

Figure 8-5: 12" Front Installation (1 of 3)

8.1.2.6 Installation – Bottom and Sides

1. Using Philips screwdriver, install four Philips screw (2) that attach Front Assy. (1) to the Ventoux body (3).
2. Tighten screws (2) to torque of 8 lb.-in
3. Install Top Cover according to section 8.1.1.

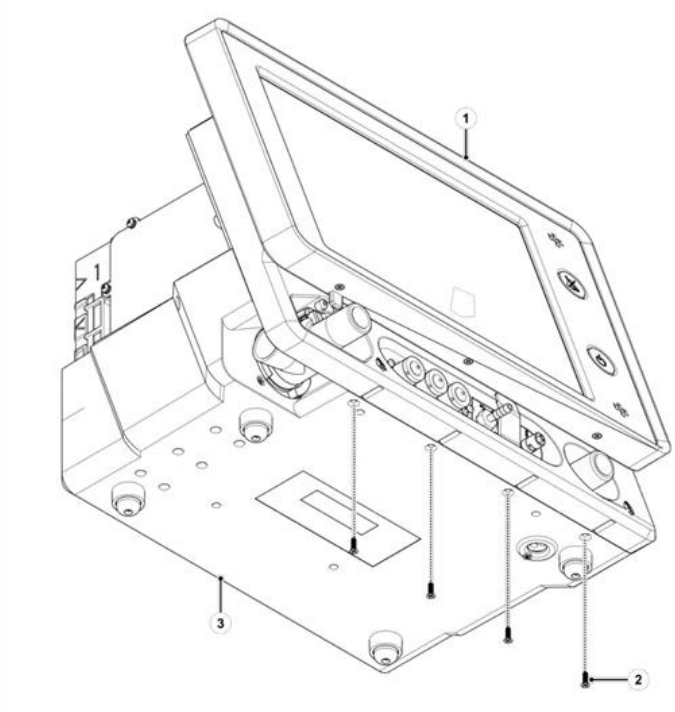

Figure 8-6: 12" Front Installation (2 of 3)

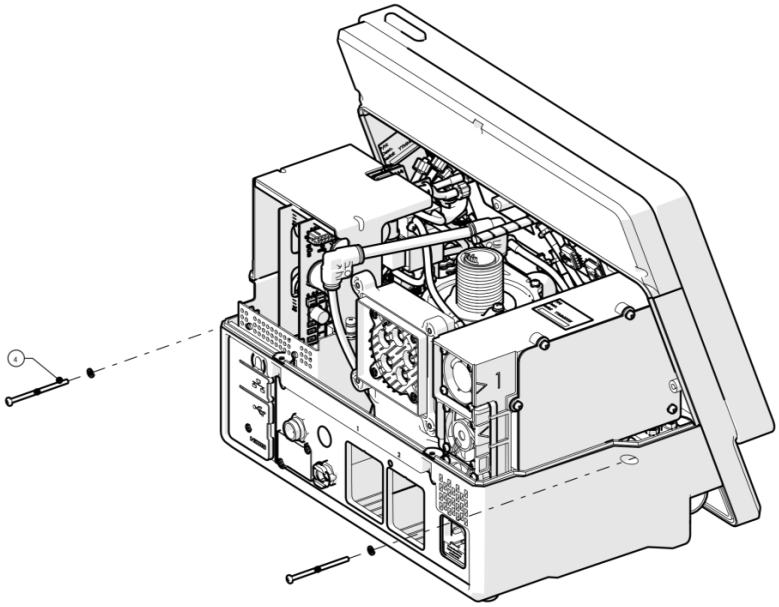

Figure 8-7: 12" Front Installation (3 of 3)

8.1.2.7 Return to Service

1. Perform ***Touch Screen calibration*** section 6.2.6.
2. Mark ***Display Board*** test at test tree in section 6.5.3 screen and run the test by clicking on ***Run***.
3. Document the relevant tests and calibration results according to section 10.

8.1.3 PCB Cage Cover Assy Removal and Installation

8.1.3.1 Safety

See clause 2

8.1.3.2 Tools and Equipment

- Philips screwdriver
- Component P/N: SUB-0272

8.1.3.3 PCB Cage Cover Assy Removal

1. Remove Top Cover according to section 8.1.1
2. Unscrew 4 Philips screws (2) that attach PCB Cage Cover Assy (1) to PCB Cage Base.
3. Remove PCB Cage Cover Assy (1) from PCB Cage Base.

8.1.3.4 PCB Cage Cover Installation

1. Position PCB Cage Cover Assy (1).
2. Tighten four Philips screws (2) that attach PCB Cage Cover Assy (1) to PCB Cage Base.
3. Install Top Cover according to section 8.1.1.

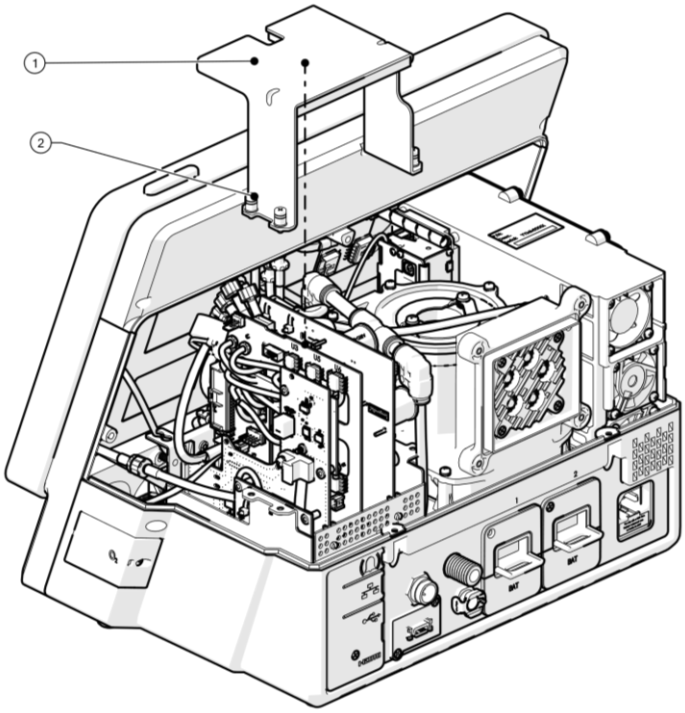

Figure 8-8: PCB Cage Cover Removal and Installation

8.1.3.5 Return to Service

N/A.

8.1.4 Power Board (PB) Assy Replacement

8.1.4.1 Safety

See clause 2

8.1.4.2 Tools and Equipment

- Philips screwdriver
- Component P/N: SUB-0281

8.1.4.3 PB Assy Removal

1. Remove Top Cover according to section 8.1.1.
2. Remove PCB Cage Cover Assy according to section 8.1.3.
3. Disconnect two quick connectors fittings (purple and orange) and one tube from leak solenoid port on the PB Assy (1).
4. Manually pull out the PB Assy (1) from the Base Board slot positioned in PCB Cage Base (2).

8.1.4.4 PB Assy Installation

1. Gently slide in the PB Assy (1) into its slot in the PCB Cage Base all the way down until it is connected to Base Board.
2. Connect two quick connectors fittings (purple and orange) and one tube to leak solenoid port to the PB Assy (1).
3. Install PCB Cage Cover Assy according to section 8.1.3.
4. Install Top Cover according to section 8.1.1.

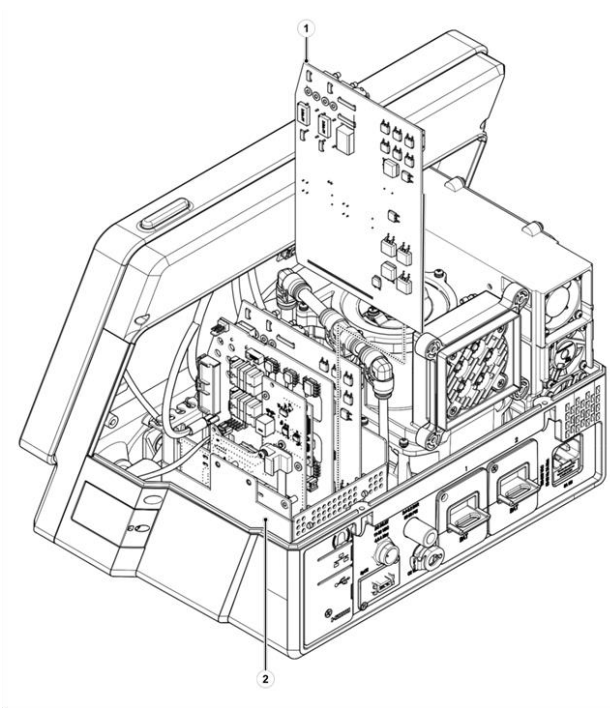

Figure 8-9: PB Assy Replacement

8.1.4.5 Return to Service

1. Perform ***Pneumatic System Calibration*** according to section 6.1.4.
2. Mark ***Power Board*** test at test tree in section 6.5.3 screen and run the test by clicking on ***Run***.
3. Document the relevant tests and calibration results according to section 10.

8.1.5 Extended Board Assy Replacement

8.1.5.1 Safety

See clause 2

8.1.5.2 Tools and Equipment

- Philips screwdriver
- Component P/N: ELA-0031

8.1.5.3 Extended Board Assy Removal

1. Remove Top Cover according to section 8.1.1.
2. Remove PCB Cage Cover Assy according to section 8.1.3.
3. If required, disconnect all the tubes and connectors from extended board assy (1).
4. Manually pull out the extended board assy. (1) from the Base Board slot that positioned in PCB Cage Base (2).

8.1.5.4 Extended Board Assy Installation

1. Gently slide in the extended board assy. into its slot in the Base Board.
2. If required, connect all connectors and tubes to the extended board assy. (1).
3. Install PCB Cage Cover Assy according to section 8.1.3.
4. Install Top Cover according to section 8.1.1.

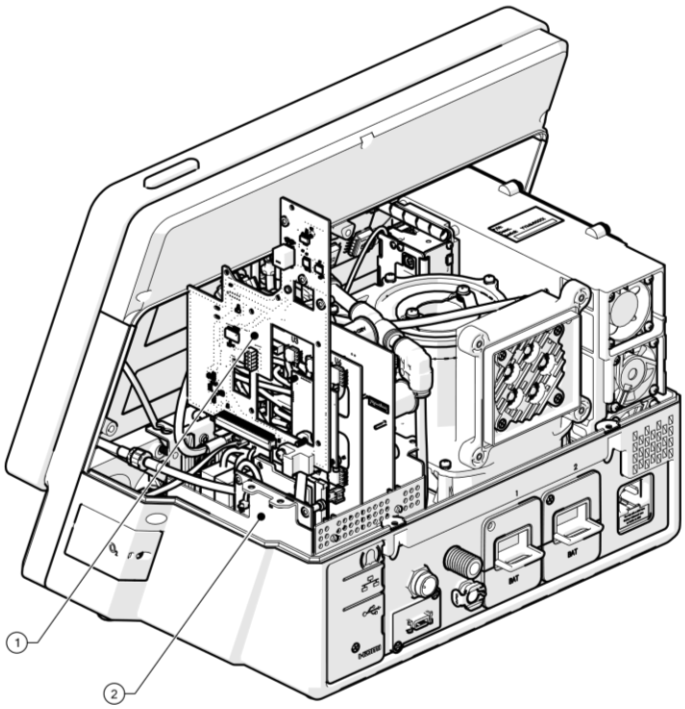

Figure 8-10: Extended Board Assy Replacement

8.1.5.5 Return to Service

N/A.

8.1.6 Nellcor SpO2 PCBA Replacement

8.1.6.1 Safety

See clause 2

8.1.6.2 Tools and Equipment

- Philips screwdriver
- Component P/N: SUB-0310

8.1.6.3 Nellcor SpO2 PCBA Removal

1. Remove Top Cover according to section 8.1.1.
2. Remove PCB Cage Cover Assy according to section 8.1.3.
3. Remove Philips screw (1) from Extended Board locking the SPO2 connector to the Nellcor SPO2 PCBA.
4. Unplug SPO2 cable connector, CBL-0126, from Nellcor SPO2 PCBA keeping its connector guide in its place on the cable connector (2).
5. If required, disconnect all the tubes and connectors from the extended board assy (3).

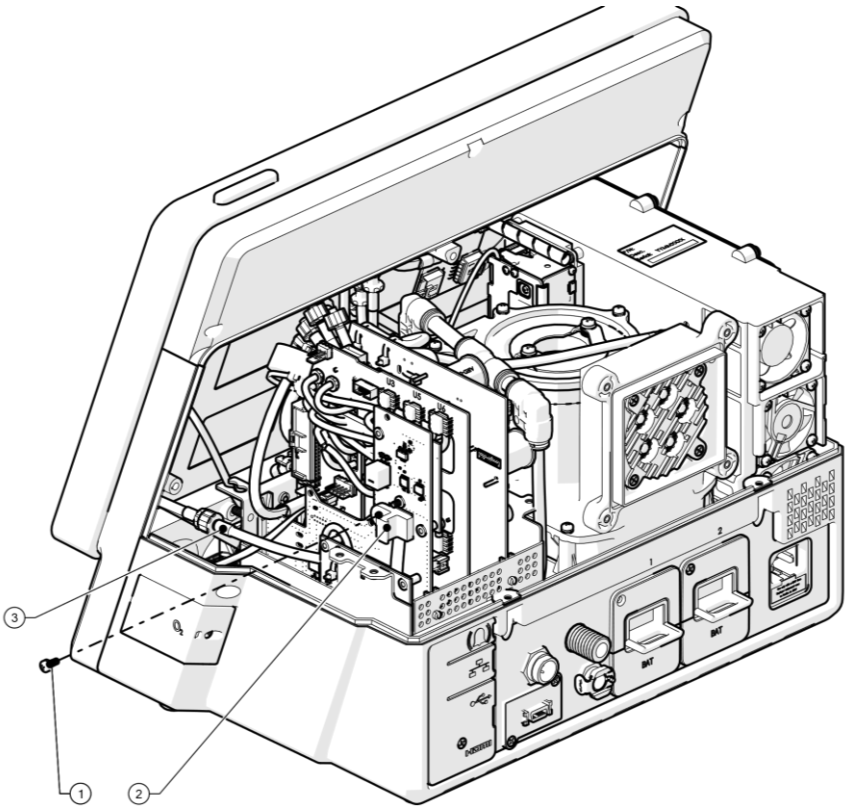

Figure 8-11: Nellcor SpO2 PCBA Replacement (1 of 2)

6. Remove Extended Board Assy according to section 8.1.5.
7. Remove two Philips screws (3) that attach Nellcor SpO2 PCBA (2) to Extended Board Assy (1).
8. Remove Nellcor SpO2 PCBA (2) from Extended Board Assy. (1).

8.1.6.4 Nellcor SpO2 PCBA Installation

1. Position Nellcor SpO2 PCBA (2) in its place on the Extended Board Assy (1).

2. Install two Philips screws (3) that attach Nellcor SpO2 PCBA (2) to Extended Board Assy. (1).
3. Tighten two screws (3) by hand force.
4. Gently slide in Extended Board Assy. according to section 9.1.5.
5. Connect SPO2 cable connector along with its connector guide to the Nellcor SpO2 PCBA.
6. Tighten one Philips screw to the Extended Board to secure the connector in its place.

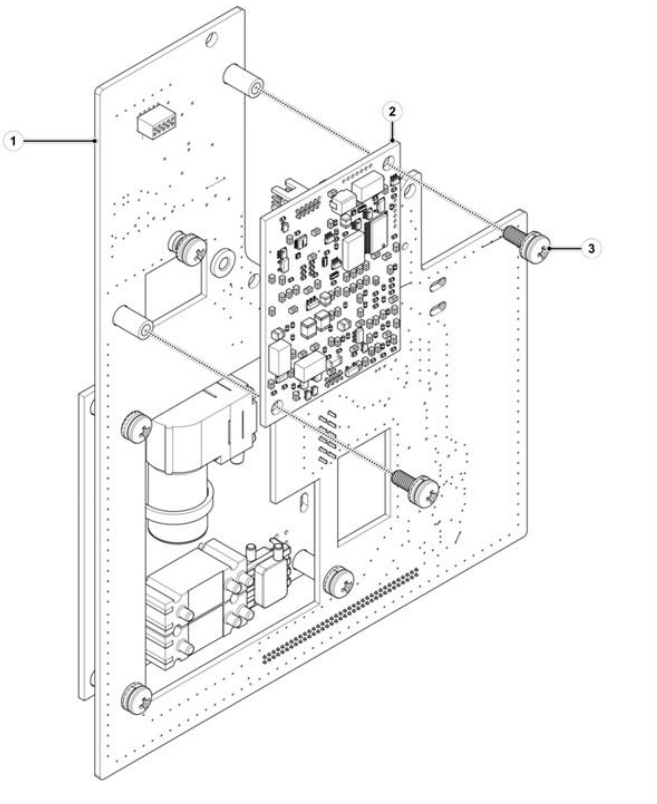

Figure 8-12: Nellcor SPO2 PCBA Replacement (2 of 2)

8.1.6.5 Return to Service

1. Mark ***SPO2 Identification*** test at test tree in section 6.5.3 screen and run the test by clicking on ***Run***.
2. Document the relevant tests and calibration results according to section 10.

8.1.7 Main Board (MB) Assy Replacement

8.1.7.1 Safety

See clause 2

8.1.7.2 Tools and Equipment

- Philips screwdriver
- Component P/N: SUB-0268

8.1.7.3 Main Board (MB) Assy Removal

If applicable, prior the removal of the MB, perform ***Export Files*** to ***Settings*** and ***MCU Parameters*** according to section 6.2.4.

No need, when replacing only the CR1225 button battery.

1. Remove Top Cover according to section 8.1.1.
2. Remove PCB Cage Cover Assy according to section 8.1.3.
3. Disconnect all the tube connectors from the MB assy. (1).
4. Disconnect CBL-0092 two connectors and from MB Assy. connectors and.
5. Disconnect FiO2 cable, CBL-0108, from Main Board.
6. Manually slide out the MB assy. (1) from the Base Board slot that positioned in PCB Cage Base (2).
7. Only when necessary, as part of the preventive maintenance, remove and replace the button battery located on the Main Board.

8.1.7.4 Main Board (MB) Assy Installation

1. Manually slide in the MB assy. (1) into the Base Board slot that positioned in PCB Cage Base (2).
2. Connect all the tubes and connectors to the MB assy. (1).
3. Install PCB Cage Cover Assy. according to section 8.1.3.

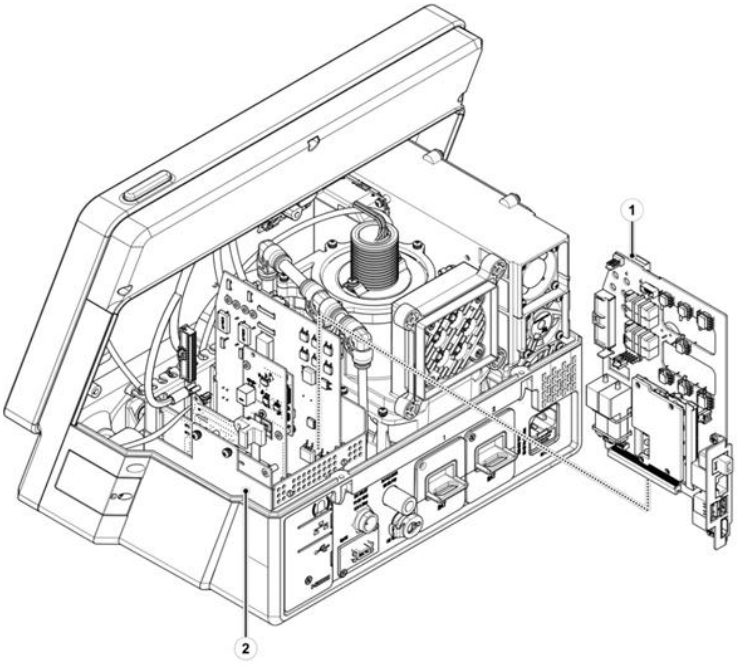

Figure 8-13: Main board Assy. Replacement

8.1.7.5 Return to Service

When replacing only the CR1225 button battery, follow section 3 only.

1. Perform ***Touch Screen Calibration*** section 6.2.6.
2. Perform ***Software Update*** according to section 6.2.3.
3. Perform ***System Clock Setup*** according to section 6.4.3.
4. If applicable, perform ***Import Files*** to ***Settings*** and ***MCU Parameters*** according to section 6.2.4.
5. Make sure the relevant activation keys of ***Additional Features*** exist according to 6.4.7.
6. Perform the following calibrations and updates:
   - ***Flow Sensors Calibration*** according to section 6.1.1.
   - ***Overpressure Valve Calibration*** according to section 6.1.3.
   - ***Pneumatic System Calibration*** according to section 6.1.4.
   - ***FiO_2 Sensor*** according to section 6.1.5.
   - ***Main Board Update*** according to section 6.2.2.
7. Mark ***Diagnostics root*** test (all the tests) at test tree in section 6.5.3 screen and run the tests by clicking on ***Run***.
8. Document the relevant tests and calibration results according to section 10.

8.1.8 Cuff Control Board Assy Replacement

8.1.8.1 Safety

See clause 2

8.1.8.2 Tools and Equipment

- Philips screwdriver
- Component P/N: SUB-0474

8.1.8.3 Cuff Control Board Assy Removal

1. Remove Top Cover according to section 8.1.1.
2. Remove PCB Cage Cover Assy according to section 8.1.3.
3. If exists, remove Philips screw from Extended Board locking the SPO2 connector to the Nellcor SPO2 PCBA. (See section 8.1.6).
4. Disconnect SPO2 cable, CBL-0126, connector from Nellcor SPO2 PCBA keeping its connector guide in its place on the cable connector. (See section 8.1.6).
5. Disconnect all the tubes and connectors from the extended board assy.
6. Remove Extended Board Assy according to section 8.1.5.
7. Remove four Philips screws (3) that attach Cuff-Control Board Assy. (1) to Extended Board Assy. (2).
8. Remove Cuff-Control Board Assy. (1) from Extended Board Assy. (2).

8.1.8.4 Cuff Control Board Assy Installation

1. Place Cuff-Control Board Assy. (1) in its place on the Extended Board Assy. (2).
2. Install four Philips screws (3) that attach Cuff-Control Board Assy. (1) to Extended Board Assy. (2).
3. Tighten screws (3) by hand force.
4. Install Extended Board Assy. according to section 8

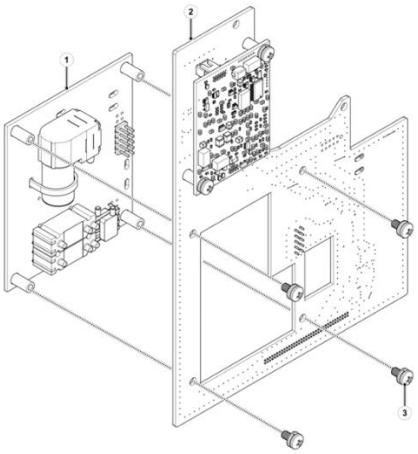

Figure 8-14: Cuff-Control Board Assy. Replacement

8.1.8.5 Return to Service

1. Mark ***Cuff Board*** test at test tree in section 6.5.3 screen and run the test by clicking on ***Run***.

2. Document the relevant tests and calibration results according to section 10.

8.1.9 Front Board Assy - Alarm Board – 8” and 12" Replacement

8.1.9.1 Safety

See clause 2

8.1.9.2 Tools and Equipment

- Philips screwdriver
- Component P/N: SUB-0476

8.1.9.3 Alarm Board Assy - 12" Removal

1. Remove Front Panel according to section 8.1.2.
2. Disconnect two speakers’ connectors from Alarm Board Assy.
3. Remove four Philips screws (3) that attach Alarm Board Assy. (4) to the Front Assy. (2).
4. Carefully remove Alarm LED PCB (1) from the Alarm Light Cover in the top of the Front panel.
5. Remove Alarm Board Assy. (4) from the Front Assy. (2).

8.1.9.4 Alarm Board Assy - 12" Installation

1. Place Alarm Board Assy. (4) in its place on the Front Assy. (2).
2. Install four Philips screws (3) that attach Alarm Board Assy. (4) to the Front Assy. (2).
3. Attach Alarm LED PCB to Alarm Light Cover in the top of the front panel.
4. Connect the 2 speakers’ connectors to the Alarm Board assy.
5. Install Front according to section 8.1.2.

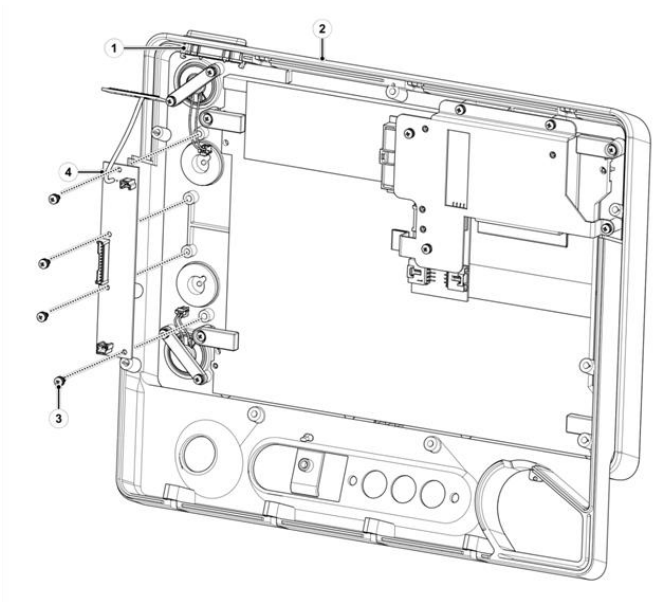

Figure 8-15: 12” Alarm Board Replacement

8.1.9.5 Return to Service

1. Mark ***Front Board*** and ***Alarm Board*** tests at test tree in section 6.5.3 screen and run the test by clicking on ***Run***.
2. Document the relevant tests and calibration results according to section 10.

8.1.10 Display Board - Main Board LVDS Cable Replacement

8.1.10.1 Safety

See clause 2

8.1.10.2 Tools and Equipment

- Philips screwdriver
- Component P/N: CBL-0092

8.1.10.3 CBL-0092 Cable Removal

1. Remove Front Panel according to section 8.1.2.
2. Remove one Philips screw (2) that attach CBL-0092 grounding cable to Display Board Assy (1).
3. Disconnect CBL-0092 cable connector (3) from Display Board Assy. connector (1).
4. Remove CBL-0092 cable (3) from Ventoux Front.

8.1.10.4 CBL-0092 Cable Installation

1. Using Philips screwdriver, install one Philips screw (2) that attach CBL-0092 grounding cable to display board assy. (1).
2. Connect CBL-0092 cable connector (3) to display board assy.
3. Install Front according to section 8.1.2.

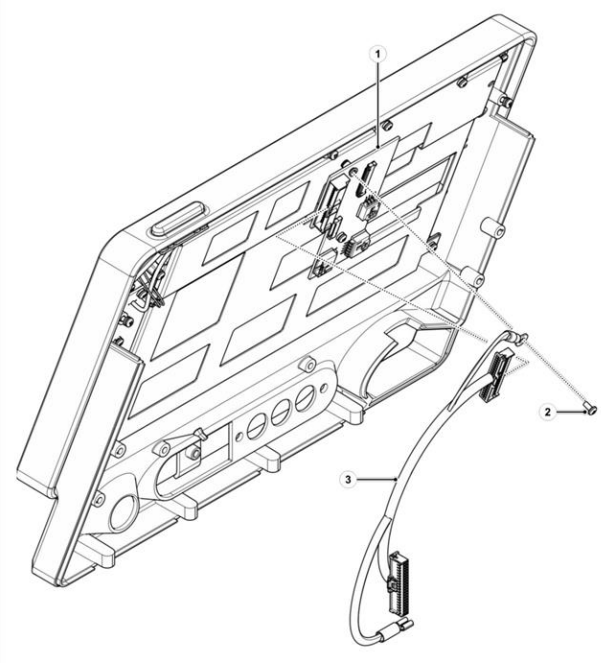

Figure 8-16: CBL-0092 Cable Replacement

8.1.10.5 Return to service

1. Mark ***Front Board*** and ***Display Board*** tests at test tree in section 6.5.3 screen and run the test by clicking on ***Run***.
2. Document the relevant tests and calibration results according to section 10.

8.1.11 8” and 12" Speaker Assy Replacement

8.1.11.1 Safety

See clause 2

8.1.11.2 Tools and Equipment

- Philips screwdriver
- Component P/N: SUB-0269/SUB-0325

8.1.11.3 8” and 12" Speaker Assy Removal

The removal procedure for Speakers is identical in both 8” and 12” Ventoux configurations.

1. Remove Front according to section 8.1.2.
2. Disconnect speaker cable connector from Alarm-Front Board Assy.
3. Remove two Philips screws (4) that attach speaker latch (3) to Front Assy.
4. Remove speaker latch (3) from Front Assy.
5. Remove speaker (2) from Front Assy.

8.1.11.4 8” and 12" Speaker Assy Installation

1. Place speaker (2) into Front Assy. aperture.
2. Place speaker latch (3) in its right place on the Front Assy.
3. Using Philips screwdriver, install two Philips screws (4) that attach speaker latch (3) to the Front Assy.
4. Connect speaker cable connector to Alarm-Front Board Assy. connector (1).
5. Install Front according to section 8.1.2.

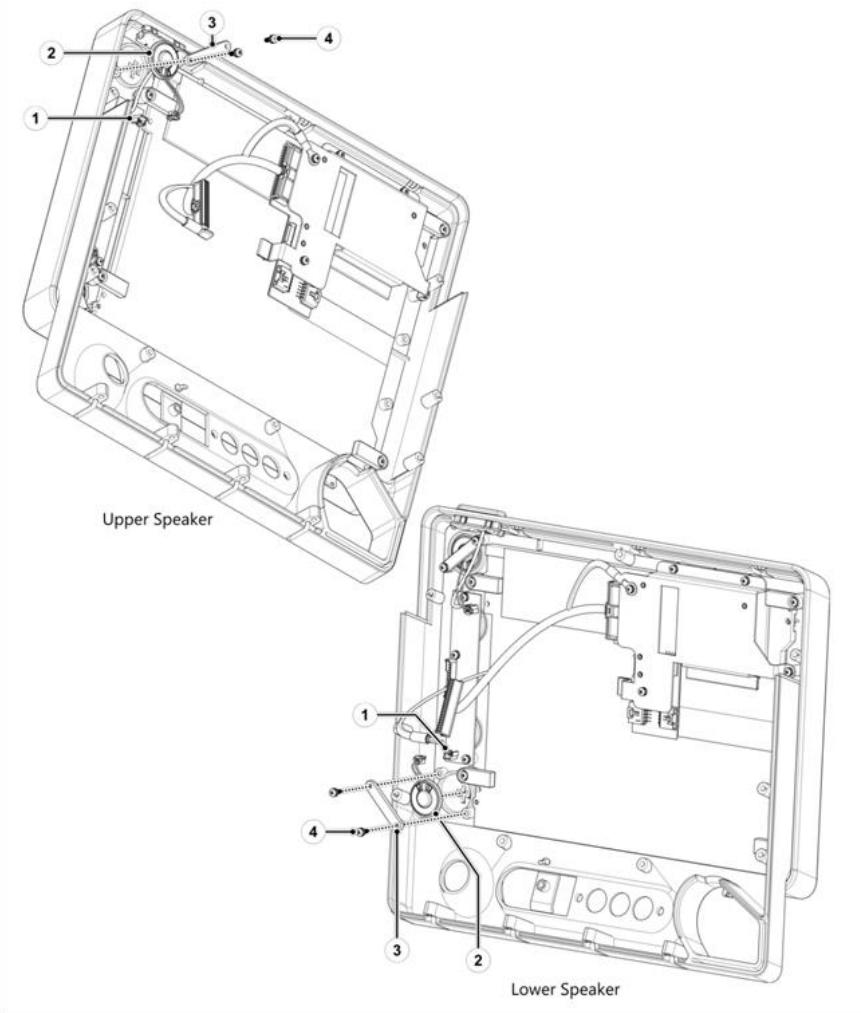

Figure 8-17: 12" Speaker Replacement

8.1.11.5 Return to Service

1. Mark ***Front Board*** test a test tree in section 6.5.3 screen and run the test by clicking on ***Run***.
2. Document the relevant tests and calibration results according to section 10.

8.1.12 Exhalation Valve Replacement

8.1.12.1 Safety

See clause 2

8.1.12.2 Tools and Equipment

- Philips screwdriver
- Component P/N: MEC-0174

8.1.12.3 Exhalation Valve Removal

1. Manually push on the upper part of the exhalation to free the locking mechanism and rotate the Exhalation Valve (2) 1/4 turn CCW.
2. Remove the Exhalation Valve (2) from its aperture (1).

8.1.12.4 Exhalation Valve Installation

1. Insert the Exhalation Valve (2) into its aperture (1).
2. Rotate the Exhalation Valve (2) 1/4 turn CW to lock it.

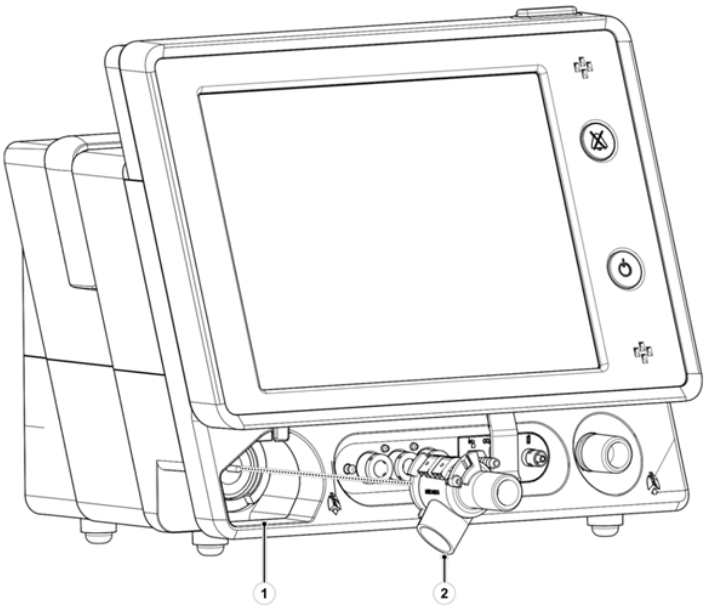

Figure 8-18: Exhalation Valve Replacement

8.1.12.5 Return to Service

1. Perform ***Pneumatic System Calibration*** according to section 6.1.4.
2. Mark the following tests at test tree in section 6.5.3 screen and run the test by clicking on ***Run***:
   - **Exhalation Flow with Max Flow**
   - **Exhalation Flow with No Flow**
   - **Exhalation Pressure Sensor**
   - **Exhalation Zero Solenoid**
3. Document the relevant tests and calibration results according to section 10.

8.1.13 Internal Mixer Replacement

8.1.13.1 Safety

See clause 2

8.1.13.2 Tools and Equipment

- Philips screwdriver
- Component P/N: SUB-0473

8.1.13.3 Internal O2 Mixer Removal

1. Remove Front according to section 8.1.2.
2. Using Philips screwdriver, release and remove O2 Mixer Board Secure Subassy (1).
3. Disconnect 2 tube connectors (2)(3) from the Mixer Driver.

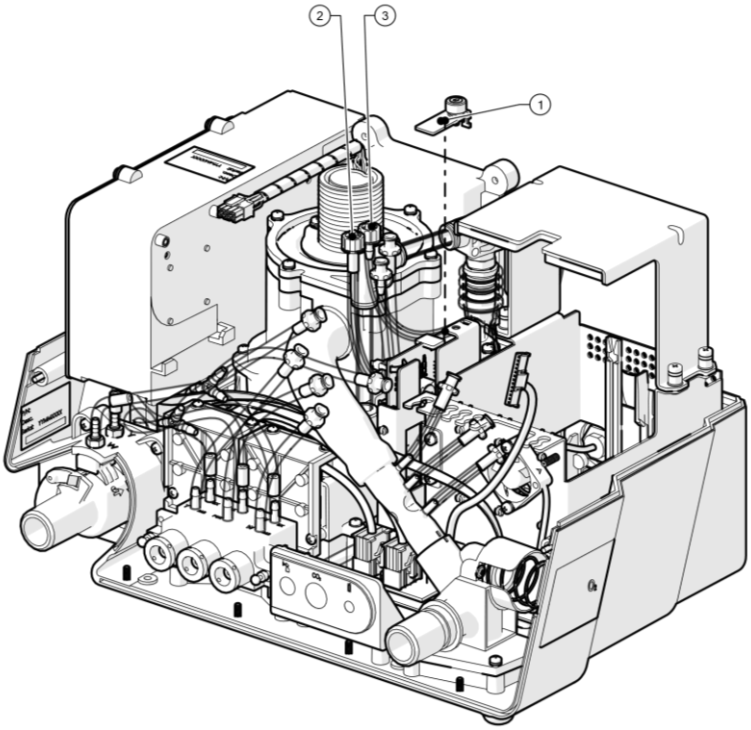

Figure 8-19: Internal Mixer Replacement (1 of 3)

4. Slightly lift and remove the O2 Mixer Driver and disconnect all 3 connectors from mixer driver according to section 8.1.18.
5. Remove the O2 driver.
6. Disconnect 2 PFA tubes from 'Tee' quick connect fitting.
7. Release 2 Philips screws (1) that attach the O2 Mixer Driver Bracket (2) to the PCB Cage Base (3).
8. Remove the O2 Mixer Driver Bracket (2).

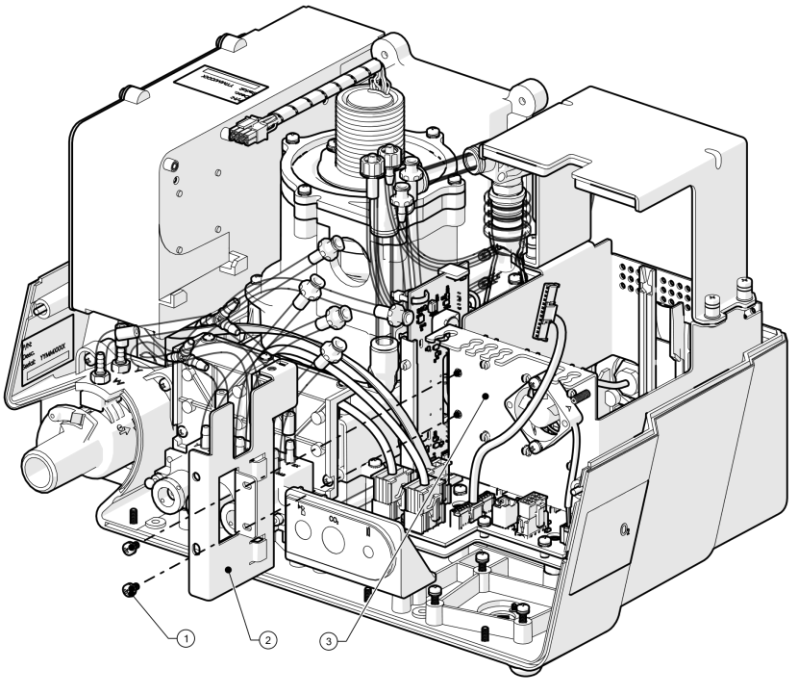

Figure 8-20: Internal Mixer Replacement (2 of 3)

9. Release three Philips captive screws (5) that attach Mixer to the base.
10. Disconnect Nebulizer tube from push-in connector (6).
11. Remove the Mixer (2) from Ventoux by pulling oxygen regulator (3) from its aperture in Ventoux back panel.

8.1.13.4 Internal Mixer Installation

1. Position the Mixer (2) in Ventoux by inserting oxygen regulator (3) to its aperture (4) in Ventoux back panel.
2. Connect nebulizer tube to Push-in connector (6).
3. Using Philips screwdriver, tighten three Philips screws (5) that attach Mixer (2) to the base.
4. Tighten screws (5) to torque of 8 lb.-in.
5. Install the O2 Mixer Driver Bracket to its place.
6. Install 2 Philips screws that attach the O2 Mixer Driver Bracket to the PCB cage base.
7. Gently insert the O2 driver.
8. Connect 3 cables to their connectors on the O2 driver.
9. Using Philips screwdriver, place and tighten O2 Mixer Board Secure Subassy.
10. Connect 2 tube connectors to the Mixer Driver.
11. Connect 2 PFA tubes to ‘Tee’ quick connect fitting.
12. Install Front according to section 8.1.2.

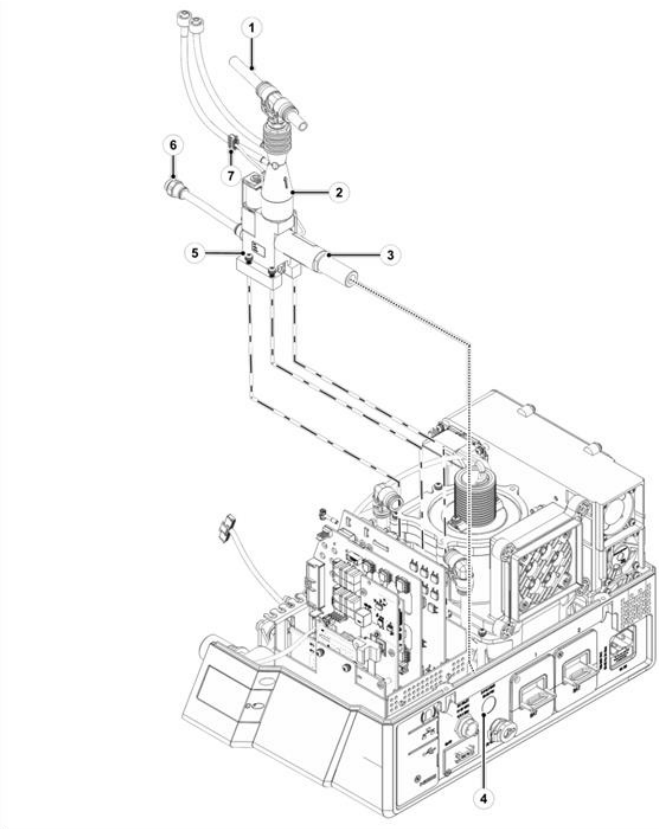

Figure 8-21: Internal Mixer Replacement (3 of 3)

8.1.13.5 Return to Service

1. Perform the following calibrations:
   - ***O2 Flow Sensors Calibration*** according to section 6.1.2.
   - ***Pneumatic System Calibration*** according section 6.1.4.
2. Mark ***O2 Mixer Board*** test at test tree in section 6.5.3 screen and run the test by clicking on ***Run***.
3. Document the relevant tests and calibration results according to section 10.

8.1.14 Nebulizer Valve SRS Replacement

8.1.14.1 Safety

See clause 2

8.1.14.2 Tools and Equipment

- Philips screwdriver
- Component P/N: SUB-0262

8.1.14.3 Valve Nebulizer SRS Removal

1. Remove Internal Mixer according to section 8.1.13.
2. Using Philips screwdriver, remove two Philips screws (3) that attach Valve Nebulizer (1) to the bottom of the O2 Mixer.
3. Remove Valve Nebulizer (1) from the O2 Mixer.

8.1.14.4 Valve Nebulizer SRS Installation

1. Place Valve Nebulizer (1) in its place on the Mixer.
2. Using Philips screwdriver, install two Philips screws (3) that attach Valve Nebulizer (1) to the Mixer.
3. Tighten by hand the screws (3).
4. Install Internal Mixer according to section 8.1.13.

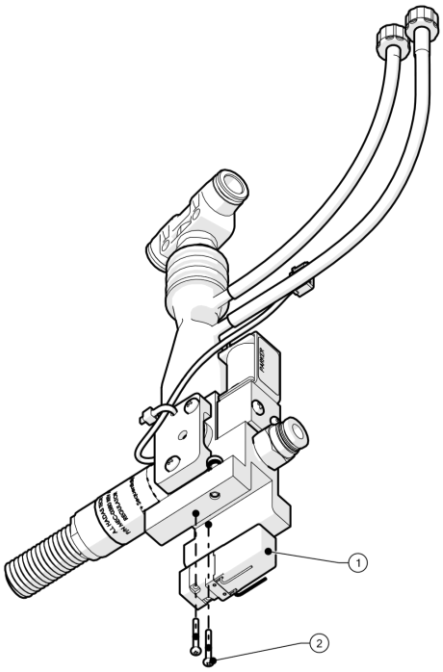

Figure 8-22: Valve Nebulizer Replacement

8.1.14.5 Return to Service

1. Mark ***O2 Mixer Board*** test at test tree in section 6.5.3 screen and run the test by clicking on ***Run***.
2. Document the relevant tests and calibration results according to section 10.

8.1.15 Proportional Valve Replacement

8.1.15.1 Safety

See clause 2

8.1.15.2 Tools and Equipment

- Philips screwdriver
- Component P/N: SUB-0263

8.1.15.3 Proportional Valve Removal

1. Remove Internal Mixer according to section 8.1.13.
2. Using Philips screwdriver, remove two Philips screws (2) that attach Proportional Valve (1) to the Mixer.
3. Remove Proportional Valve (1) from the Mixer.

8.1.15.4 Proportional Valve Installation

1. Position Proportional Valve (1) in its place on the Mixer.
2. Using Philips screwdriver, install two Philips screws (2) that attach Proportional Valve (1) to the Mixer.
3. Tighten screws (2) to torque of 8 lb.-in.
4. Install Internal Mixer according to section 9.1.17.

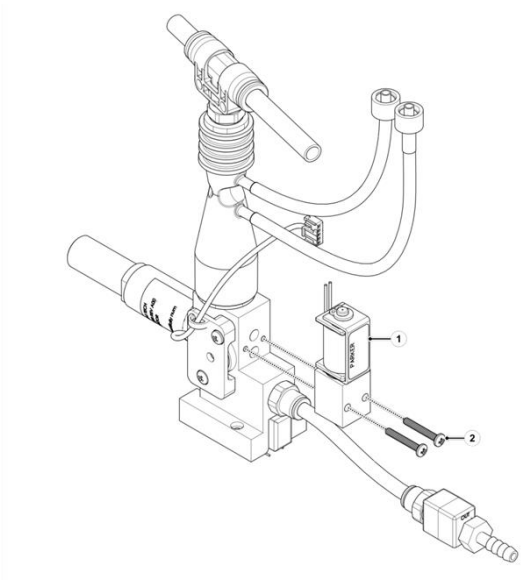

Figure 8-23: Proportional Valve Replacement

8.1.15.5 Return to Service

1. Perform ***Pneumatic System Calibration*** section 6.1.4.
2. Mark ***O2 Mixer Board*** test at test tree in section 6.5.3 screen and run the test by clicking on ***Run***.
3. Document the relevant tests and calibration results according to section 10.

8.1.16 Regulator Replacement

8.1.16.1 Safety

See clause 2

8.1.16.2 Tools and Equipment

- Philips screwdriver
- Component P/N: SUB-0492

8.1.16.3 Regulator Removal

1. Remove Internal Mixer according to section 8.1.13.
2. Manually unscrew Regulator (2) from O2 Mixer (1).
3. Make sure that the Regulator (2) is removed without its O-ring.

8.1.16.4 Regulator Installation

1. Make sure that the O-ring is installed on the mixer thread area. (1).
2. Manually Install Regulator (2) on Mixer Valve (1).
3. Install Internal Mixer according to section 8.1.13.

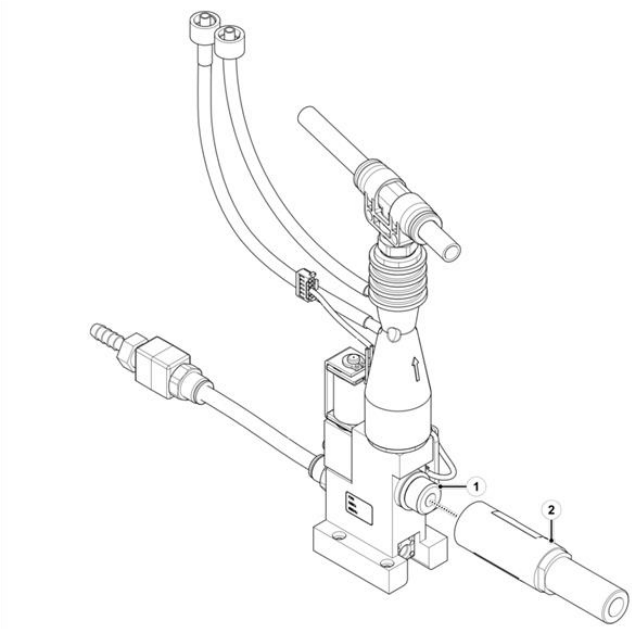

Figure 8-24: Regulator Replacement

8.1.16.5 Return to Service

1. Perform ***Pneumatic System calibration*** section 6.1.4.
2. Mark ***O2 Mixer Board*** test at test tree in section 6.5.3 screen and run the test by clicking on ***Run***.
3. Document the relevant tests and calibration results according to section 10.

8.1.17 O2 Pressure Sensor Replacement

8.1.17.1 Safety

See clause 2

8.1.17.2 Tools and Equipment

- Philips screwdriver
- Cutter
- Component P/N: CBL-0129

8.1.17.3 O2 Pressure Sensor Removal

1. Remove Internal Mixer according to section 8.1.13.
2. Using a cutter, cut the tie-wrap (2) that secures O2 pressure sensor cable (1) to sensor holder (4).
3. Using Philips screwdriver, remove two Philips screws (3) that attach sensor holder (4) to the O2 mixer.
4. Remove O2 Pressure Sensor (1) from O2 mixer- (**Notice the orientation of the sensor)**.
5. Make sure the gasket is kept in its place once (5) removing the O2 pressure sensor cable.

8.1.17.4 O2 Pressure Sensor

1. Make sure the gasket (5) is in its place.
2. Position O2 Pressure Sensor (1) in its place on O2 mixer.
3. Position sensor holder (4) to the O2 mixer- (**Notice the orientation of the sensor)**.
4. Using Philips screwdriver, install two Philips screws (3) that attach sensor holder (4) to the O2 mixer.
5. Tighten two screws (3) to torque of 8 lb-in.
6. Secure with a tie-wrap (2) O2 pressure sensor (1) to sensor holder (4).

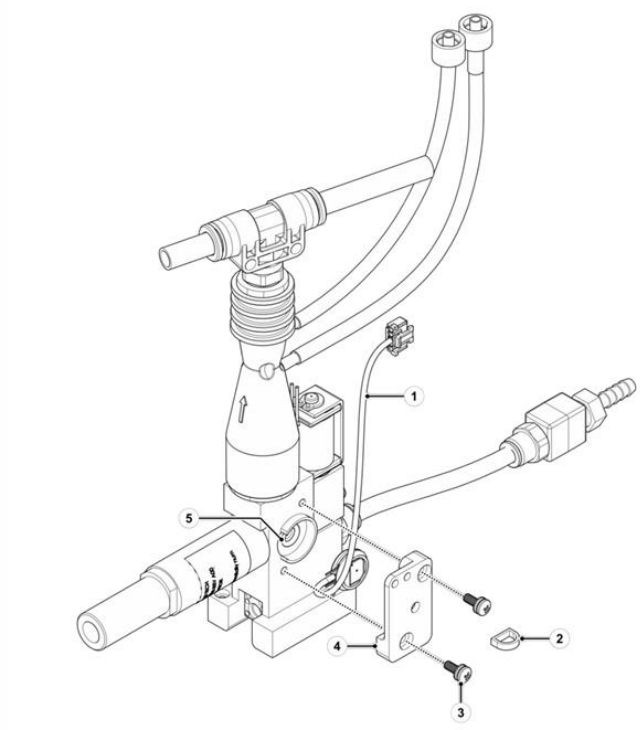

Figure 8-25: O2 Pressure Sensor Replacement

8.1.17.5 Return to Service

1. Mark ***O2 Mixer Board*** test at test tree in section 6.5.3 screen and run the test by clicking on ***Run***.
2. Document the relevant tests and calibration results according to section 10.

8.1.18 O_2 Mixer Driver Assy Replacement

8.1.18.1 Safety

See clause 2

8.1.18.2 Tools and Equipment

- Philips screwdriver
- Component P/N: SUB-0249

8.1.18.3 O2 Mixer Driver Assy Removal

1. Remove Front according to section 8.1.2
2. Using Philips screwdriver, release and remove O2 Mixer Board Secure Assy (1).
3. Disconnect Nebulizer solenoid cable connector (3).
4. Disconnect Proportional Valve cable connector (5).
5. Disconnect O2 Pressure Sensor (CBL-129) cable connector (4).
6. Disconnect 2 tube connectors from the O2 driver.
7. Remove O2 mixer driver assy. (6) from Ventoux.

8.1.18.4 O2 Mixer Driver Assy Installation

1. Position O2 mixer driver assy. (6) in its place by connecting O2 mixer driver assy. connector to Ventoux.
2. Connect Nebulizer Valve cable connector (3).
3. Connect Proportional Valve cable connector (5).
4. Connect O2 Pressure Sensor (CBL-129) cable connector (4).
5. Connect 2 tube connectors from the O2 driver.
6. Place O2 Mixer Board Secure (2) to its bracket.
7. Using Philips screwdriver, install O2 Mixer Board Secure screw (1) that attaches it to (2) to its bracket.
8. Tighten screw (1) by hand-force.
9. Install Front according to section 8.1.2.

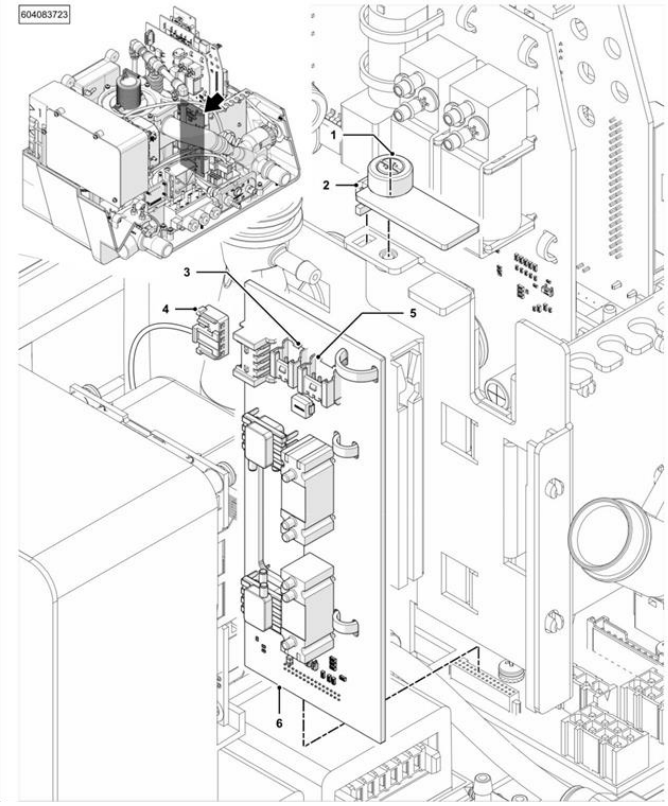

Figure 8-26: O2 Mixer Driver Assy. Replacement

8.1.18.5 Return to Service

1. Perform ***O2 Flow Sensors Calibration*** according to section 6.1.2.
2. Mark ***O2 Mixer Board*** test at test tree in section 6.5.3 screen and run the test by clicking on ***Run***.
3. Document the relevant tests and calibration results according to section 10.

8.1.19 Dual Limb Diaphragm Silicone Replacement

8.1.19.1 Safety

See clause 2

8.1.19.2 Tools and Equipment

- Philips screwdriver
- Component P/N: V64-11200-06

8.1.19.3 Dual Limb Diaphragm Silicone Removal

1. Remove Exhalation Valve according to section 8.1.12.
2. Gently pull the Diaphragm (2) from its aperture (1).

8.1.19.4 Dual Limb Diaphragm Silicone Installation

1. Place the Diaphragm (2) into its aperture (1).
2. Install Exhalation Valve according to section 8.1.12.

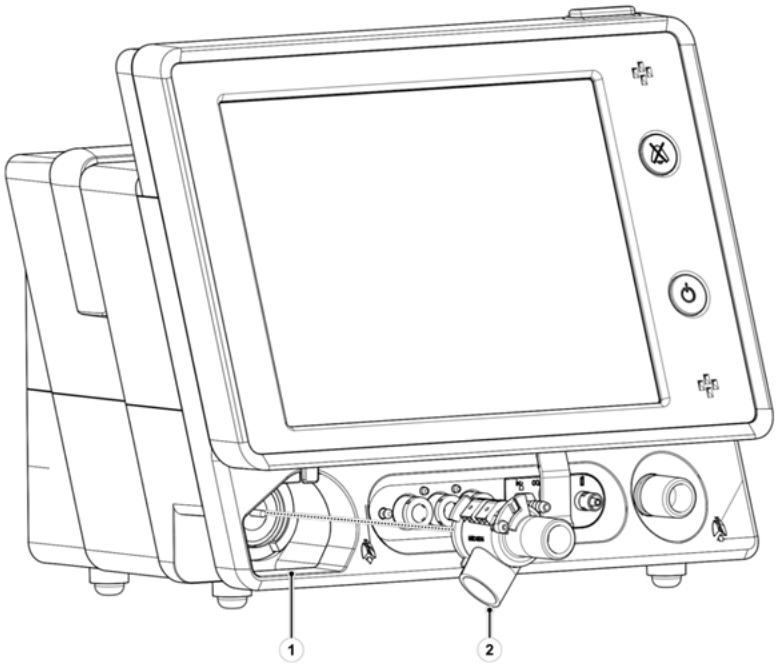

Figure 8-27: Dual Limb Diaphragm Silicone Replacement

8.1.19.5 Return to Service

1. Perform ***Pneumatic System Calibration*** according to section 6.1.4.
2. Document the relevant tests and calibration results according to section 10.

8.1.20 Oxygen Sensor Replacement

8.1.20.1 Safety

See clause 2

8.1.20.2 Tools and Equipment

- Philips screwdriver
- Component P/N: G60-25000-29

8.1.20.3 Oxygen Sensor Removal

1. Using Philips screwdriver, remove Philips screw (2) that attaches Oxygen Sensor Door (3) to the Ventoux body.
2. Disconnect Oxygen Sensor Cable (1) from the Oxygen Sensor.
3. Using a dedicated tool (TOL-0020), remove the oxygen sensor (1) from its place in the Ventoux body.

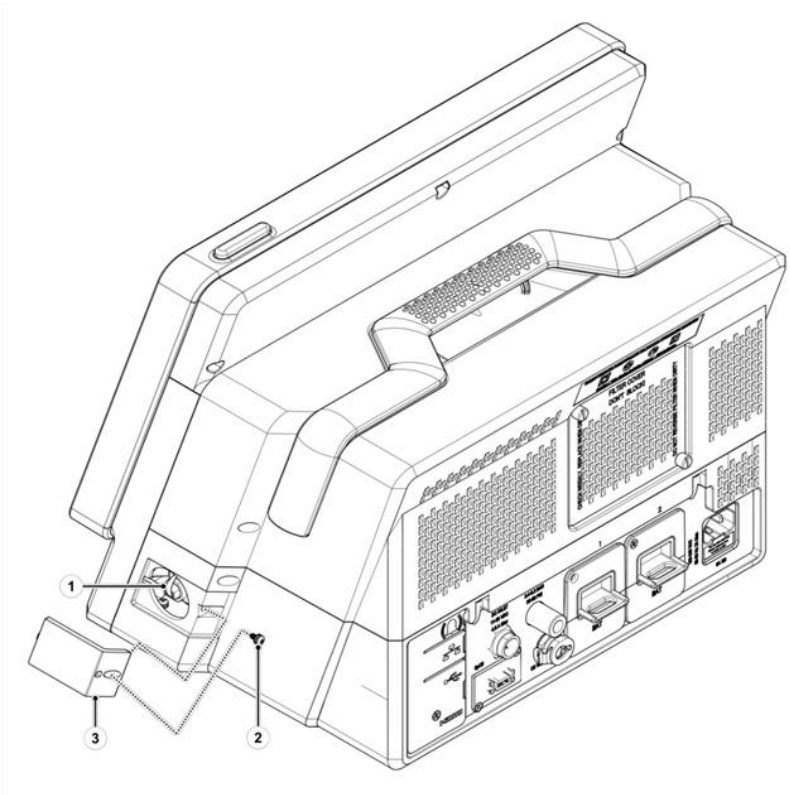

Figure 8-28: Oxygen Sensor Cover Removal

8.1.20.4 Oxygen Sensor Installation

1. Using a dedicated tool (TOL-0020), manually tighten Oxygen Sensor (1) in its place in the Ventoux body.
2. Connect Oxygen Sensor Cable (1) to the Oxygen Sensor.
3. Using Philips screwdriver, install Philips screw (2) that attaches Oxygen Sensor Door (3) to the Ventoux body.
4. Tighten screw (2) to torque of 8 lb.-in.

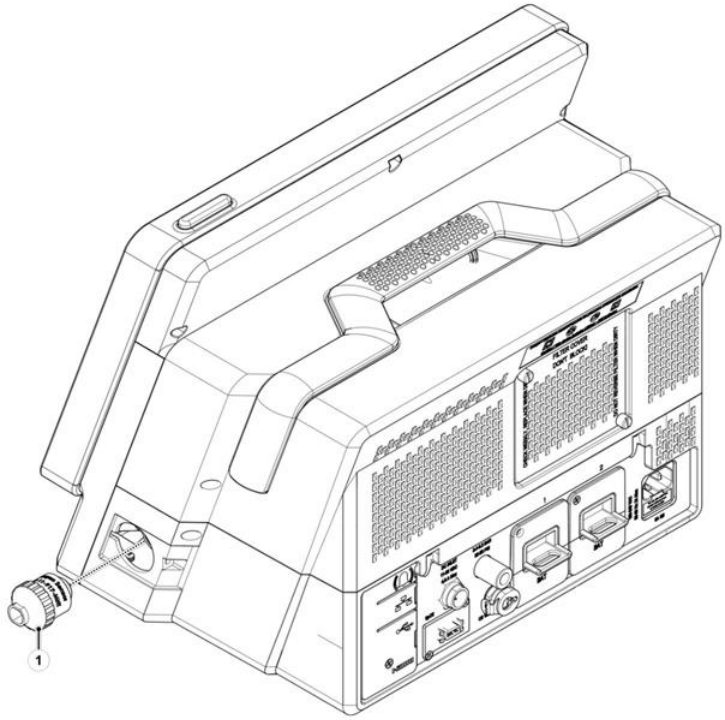

Figure 8-29: Oxygen Sensor Replacement

8.1.20.5 Return to Service

1. Perform ***FiO2 Sensor calibration*** according to section 6.1.5.
2. Mark ***Fio2 Sensor Identification*** test at test tree in section 6.5.3 screen and run the test by clicking on ***Run***.
3. Document the relevant tests and calibration results according to section 10.

8.1.21 Power Supply Assy Replacement

8.1.21.1 Safety

See clause 2

8.1.21.2 Tools and Equipment

- Philips screwdriver
- Component P/N: SUB-0258

8.1.21.3 Power Supply Assy Removal

1. Remove Front according to section 8.1.2.
2. Disconnect Power Supply cable connector from Base Board (3).
3. Disconnect Fans Cable connector from Base Board.
4. Using Philips screwdriver, remove six Philips screws and washers (2) that attach Power Supply Assy. (1) to Ventoux body.
5. Remove Power Supply Assy. (1) from Ventoux body.

8.1.21.4 Power Supply Assy Installation

1. Position Power Supply Assy. (1) in its place in the Ventoux body.
2. Using Philips screwdriver, install six Philips screws and washers (2) that attach Power Supply Assy. (1) to Ventoux body.
3. Tighten screws (2) to torque of 8 lb.-in.
4. Connect Power Supply cable connector to Base Board Connector (3).
5. Connect Fans Cable connector to Base Board.
6. Install Front according to section 8.1.2.

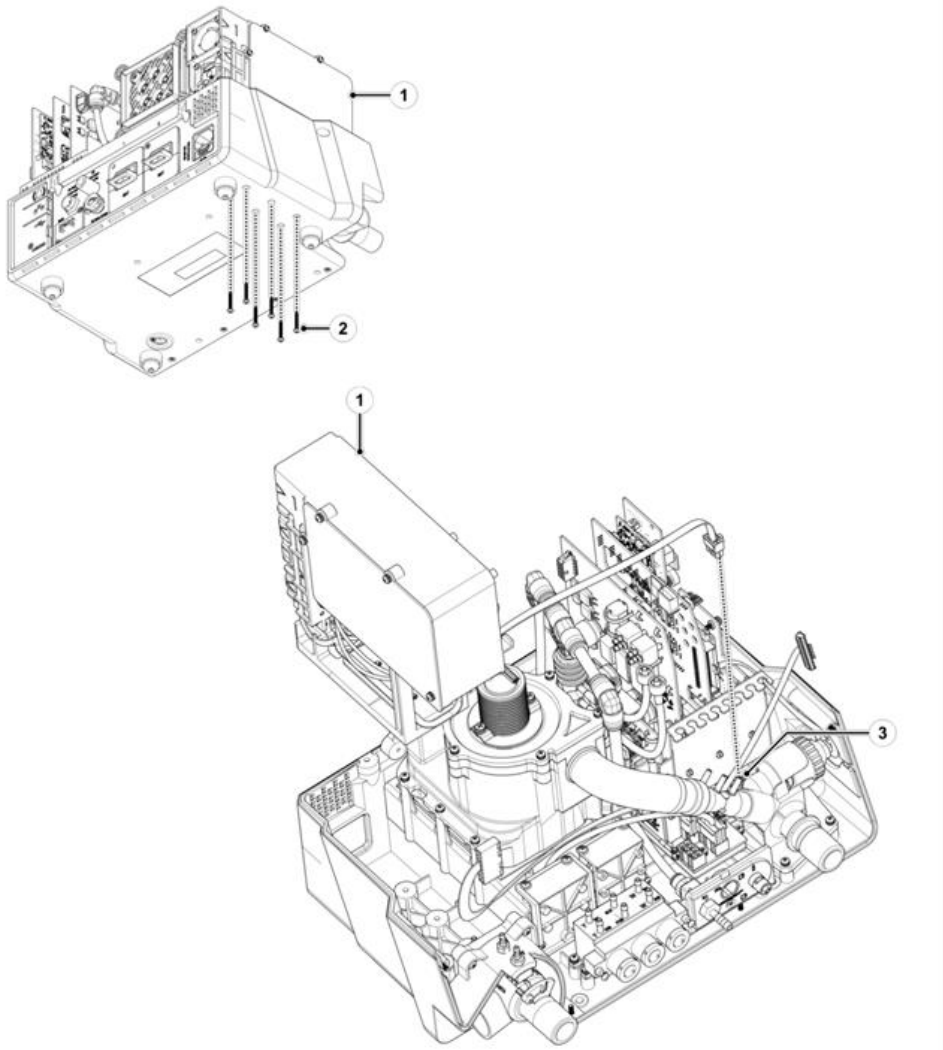

Figure 8-30: Power Supply Assy. Replacement

8.1.21.5 Return to Service

1. Mark ***Cooling Fans*** and ***Safety Fan*** tests at test tree in section 6.5.3 screen and run the tests by clicking on Run.
2. Document the relevant tests and calibration results according to section 10.

8.1.22 AC/DC Power Supply Single-OUT 24V 8.33A Replacement

8.1.22.1 Safety

See clause 2

8.1.22.2 Tools and Equipment

- Philips screwdriver
- Component P/N: PWR-0005

8.1.22.3 AC/DC Power Supply Single-OUT 24V 8.33A Removal

1. Remove Top Cover according to section 8.1.1
2. Using Philips screwdriver, remove four Philips screws (5) that attach Power Supply cover (4) to Power Supply Assy. (1).
3. Disconnect two cables from AC/DC Power Supply Board (2).
4. Using Philips screwdriver, remove four Philips screws (3) that attach AC/DC Power Supply Board (2) to Power Supply Assy. (1).
5. Remove AC/DC Power Supply Board (2) from Power Supply Assy. (1).

8.1.22.4 AC/DC Power Supply Single-OUT 24V 8.33A Installation

1. Position AC/DC Power Supply Board (2) in its place in the Power Supply Assy. (1).
2. Using Philips screwdriver, install four Philips screws (3) that attach AC/DC Power Supply Board (2) to Power Supply Assy. (1).
3. Tighten screws (3) to torque of 8 lb.-in.
4. Connect two cables to AC/DC Power Supply Board (2).
5. Using Philips screwdriver, install four Philips screws (5) that attach Power Supply cover (4) to Power Supply Assy. (1).
6. Tighten screws (5) to torque of 8 lb.-in.

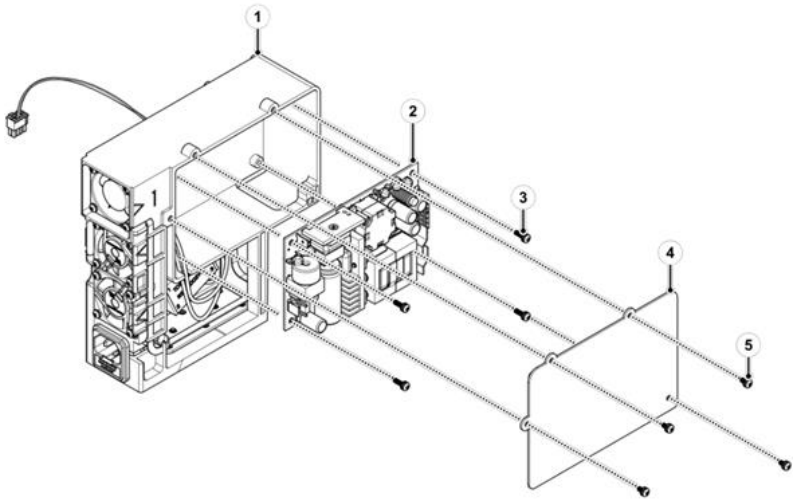

Figure 8-31: AC-DC Power Supply Replacement

8.1.22.5 Return to Service

1. Mark ***Cooling Fans*** and ***Safety Fan*** tests at test tree in section 6.5.3 screen and run the tests by clicking on Run.
2. Document the relevant tests and calibration results according to section 10.

8.1.23 Blower Assy Replacement

8.1.23.1 Safety

See clause 2

8.1.23.2 Tools and Equipment

- Philips screwdriver
- Component P/N: SUB-0248

8.1.23.3 Blower Assy Removal

1. Remove Front according to section 8.1.2.
2. Disconnect electrical connector of blower from Power Board.
3. Disconnect silicone tube connected to the Power Board from the Blower Assy side.
4. Disconnect PFA tube from elbow fitting installed on the Blower Assy.
5. Using Philips screwdriver, remove six Philips screws (2) that attach Blower Assy. (1) to Ventoux body.
6. Remove Blower Assy. (1) from Ventoux body.

8.1.23.4 Blower Assy Installation

1. Position Blower Assy. (1) in its place in the Ventoux body.
2. Position Blower Assy. hose (4) in its place on the Outlet Assy. hose (3).
3. Connect electrical connector of blower to Power Board.
4. Connect silicone tube from Power Board.
5. Connect PFA tube to elbow fitting installed on the Blower Assy.
6. Using Philips screwdriver, install six Philips screws (2) that attaches Blower Assy. (1) to Ventoux body.
7. Tighten screws (2) to torque of 8 lb.-in.
8. Install Front according to section 8.1.2.

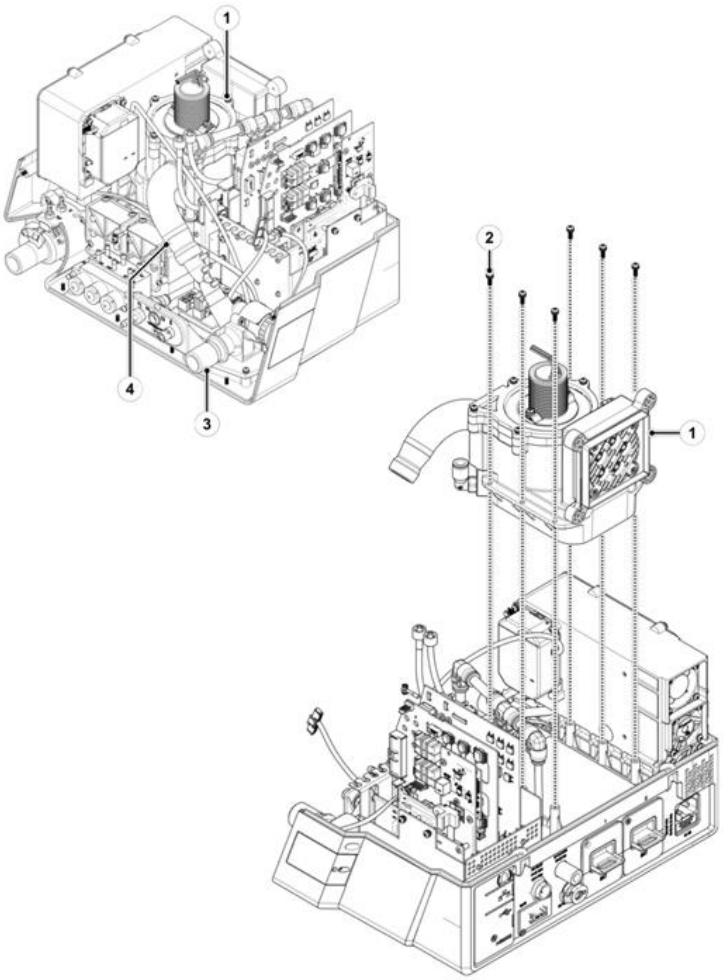

Figure 8-32: Blower Replacement

8.1.23.5 Return to Service

1. Perform the following procedures:
   - ***Turbine replacement*** according to section 6.2.1.
   - ***Flow Sensors Calibration*** according to section 6.1.1.
   - ***O2 Flow Sensors Calibration*** according to section 6.1.2.
   - ***Overpressure Valve Calibration*** according to section 6.1.3.
   - ***Pneumatic System Calibration*** section 6.1.4.
   - ***FiO_2 Sensor*** according to section 6.1.5.
2. Mark ***Turbine*** and ***Turbine Brake*** tests at test tree in section 6.5.3 screen and run the test by clicking on ***Run***.
3. Document the relevant tests and calibration results according to section 10.

8.1.24 Three Way Valve Replacement

8.1.24.1 Safety

See clause 2

8.1.24.2 Tools and Equipment

- Philips screwdriver
- Component P/N: SUB-0261

8.1.24.3 Three Way Valve Removal

1. Remove Front according to section 8.1.2.
2. Disconnect all the necessary tubes.
3. Using Philips screwdriver, remove four Philips screws (1) that attach Three Way Valve (2) to Ventoux body.
4. Remove Three Way Valve (2) from Ventoux body.

8.1.24.4 Three Way Valve

1. Place Three Way Valve (2) in Ventoux body.
2. Using Philips screwdriver, install four Philips screws (2) that attach Three Way Valve (1) to Ventoux body.
3. Tighten screws (2) to torque of 8 lb.-in.
4. Connect all the necessary tubes.
5. Install Front according to section 8.1.2.

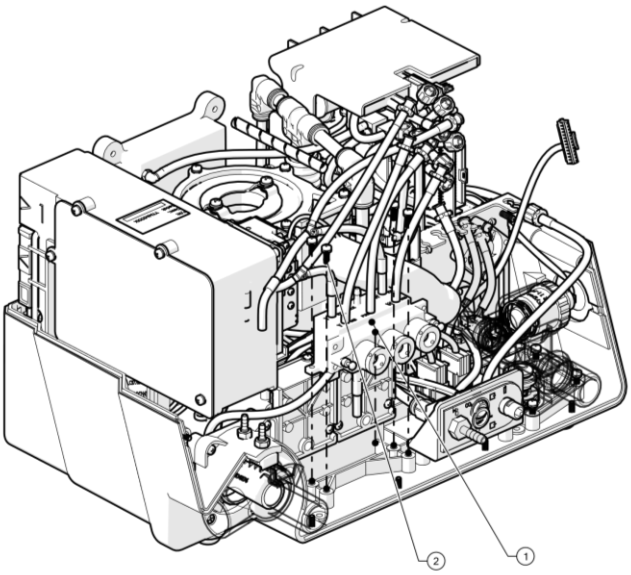

Figure 8-33: Three Way Valve Replacement

8.1.24.5 Return to Service

1. Mark ***Threeway Valve*** test at test tree in section 6.5.3 screen and run the test by clicking on ***Run***.
2. Document the relevant tests and calibration results according to section 10.

8.1.25 Blower One Way Valve Cassette Replacement

8.1.25.1 Safety

See clause 2

8.1.25.2 Tools and Equipment

- Philips screwdriver
- Component P/N: SUB-0324

8.1.25.3 Blower One Way Valve Cassette removal

1. Remove Top Cover according to section 8.1.1.
2. Using Philips screwdriver, remove four Philips screws (3) that attach Blower One Way Valve Cassette (2) from Blower Assy. (1).
3. Remove Blower One Way Valve Cassette (2) from Blower Assy. (1).
4. Remove O-ring gasket (4).

8.1.25.4 Blower One Way Valve Cassette Installation

1. Place O-ring gasket (4) in One Way Valve Cassette (2).
2. Place Blower One Way Valve Cassette (2) in its place on Blower Assy. (1).
3. Using Philips screwdriver, install four Philips screws (3) that attach Blower One Way Valve Cassette (2) to Blower Assy. (1).
4. Tighten screws (1) to torque of 8 lb.-in.
5. Install Top Cover according to section 8.1.1.

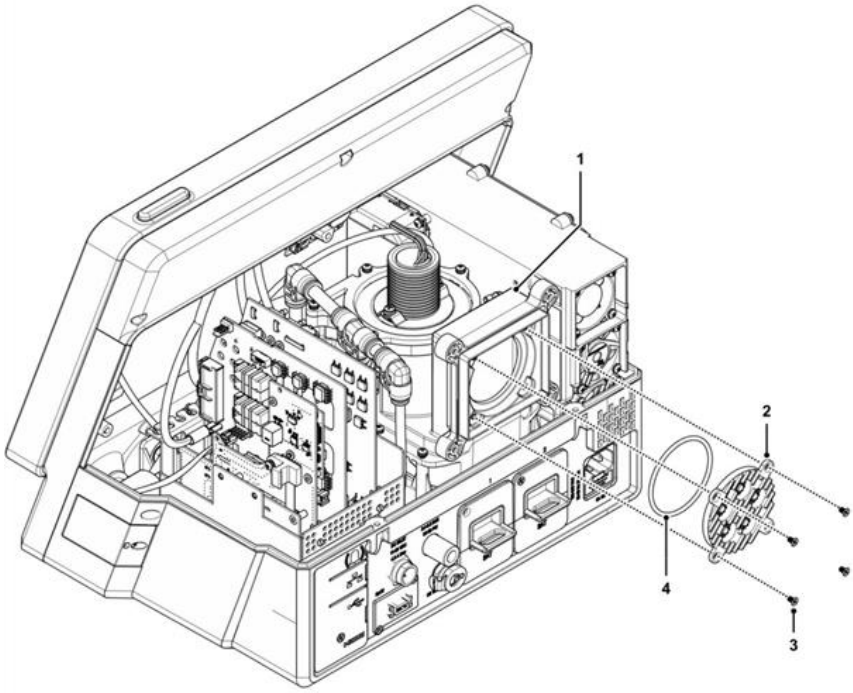

Figure 8-34: Blower One Way Valve Cassette Replacement

8.1.25.5 Return to Service

N/A.

8.1.26 Philips Capnography Cable Replacement

8.1.26.1 Safety

See clause 2

8.1.26.2 Tools and Equipment

- Philips screwdriver
- Component P/N: CBL-0111

8.1.26.3 Philips Capnography Cable Removal

1. Remove Front according to section 8.1.2.
2. Disconnect Philips connector (1) from Base Board (4).
3. Release Philips panel connector (1) from the Connectors Interface Panel (2) by unscrewing the locking yellow plastic nut (3).
4. Remove Philips cable from Ventoux body.

8.1.26.4 Philips Capnography Cable Installation

1. Place Philips cable (1) in Ventoux body.
2. Properly route the cable in order avoid any unnecessary tension to it.
3. Connect Philips cable (1) to Base Board (4).
4. Install Philips connector (1) to the Connectors Interface Panel (2).
5. Manual tighten the locking yellow plastic nut (3) in order to lock the Philips connector in its place.
6. Install Front according to section 8.1.2.
7. Install Top Cover according to section 8.1.1.

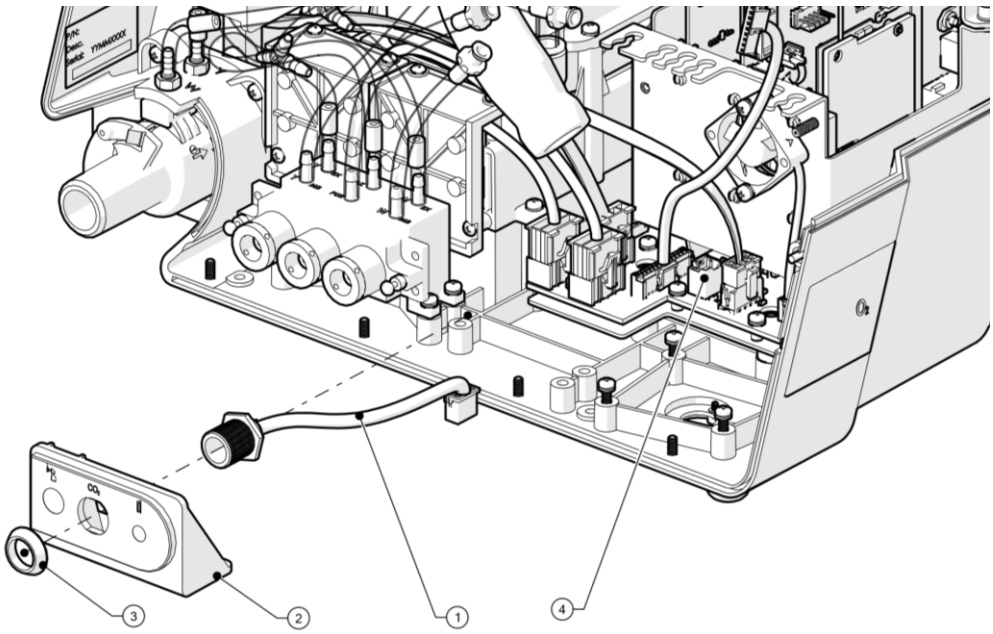

Figure 8-35: Philips Capnography Cable Replacement

8.1.26.5 Return to Service

1. Mark ***Capnography Identification*** test at test tree in section 6.5.3 screen and run the test by clicking on ***Run***.
2. Document the relevant tests and calibration results according to section 10.

8.1.27 Oridion Capnography Cable Replacement

8.1.27.1 Safety

See clause 2

8.1.27.2 Tools and Equipment

- Philips screwdriver
- Component P/N: CBL-0110

8.1.27.3 Oridion Capnography Cable Removal

1. Remove Front according to section 8.1.2.
2. Disconnect CBL-0110 connector (1) from Oridion Module connector.
3. Disconnect CBL-0110 connector (3) from Base Board connector.
4. Remove CBL-0110 cable (2) from Ventoux body.

8.1.27.4 Oridion Capnography Cable Installation

1. Connect CBL-0110 connector (1) to Oridion Module connector.
2. Properly route the cable in order avoid any unnecessary tension to it.
3. Connect CBL-0110 connector (3) to Base Board connector.
4. Install Front according to section 8.1.2..

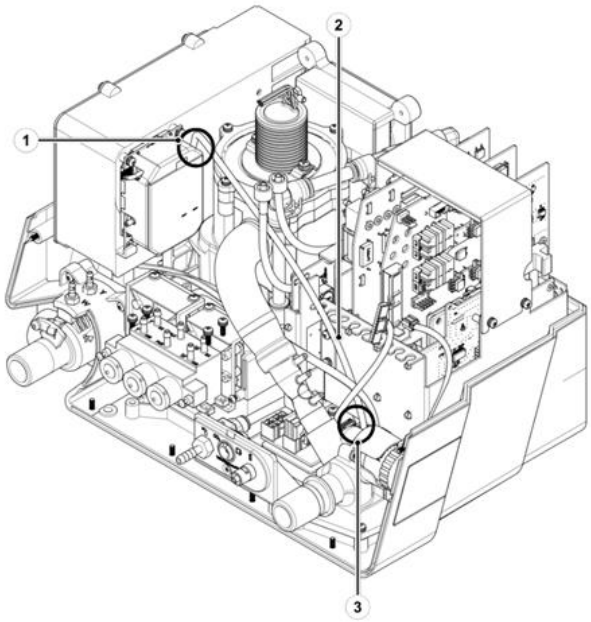

Figure 8-36: Oridion Capnography Cable Replacement

8.1.27.5 Return to Service

1. Mark ***Capnography Identification*** test at test tree in section 6.5.3 screen and run the test by clicking on ***Run***.
2. Document the relevant tests and calibration results according to section 10.

8.1.28 Oridion Capnography Module Replacement

8.1.28.1 Safety

See clause 2

8.1.28.2 Tools and Equipment

- Philips screwdriver
- Long nose pliers
- Component P/N: SUB-0451

8.1.28.3 Oridion Capnography Cable Removal

1. Remove Front according to section 8.1.2.
2. Using Pliers, remove by pulling the locking spring (1) mounted on Connectors Interface Panel (2).
3. Remove Oridion Interface Connector (3).
4. Disconnect CBL-0110 from the Oridion module end according to section 8.1.27.
5. Using Philips screwdriver, remove two Philips screws (4) that attach the Oridion Module (5) to the back of the Power Supply box (8).
6. If exists, remove 2 Philips screws (7) attached to the adaptor plate (6).
7. Remove Oridion Module (5) from Ventoux body.

8.1.28.4 Oridion Capnography Module Installation

1. If exists, install 2 Philips screws (7) attaching the Oridion Module (5) to the adaptor plate (6).
2. Place the Oridion Module into its place on the back Power Supply box (8).
3. Using Philips screwdriver, install two Philips screws (4) that attach the Oridion Module to the back of the Power Supply box.
4. Connect CBL-0110 connector to Oridion Module according to section 8.1.27.
5. Place Oridion Interface Connector (3) into its designated aparture in Connectors Interface Panel (2).
6. Lock Oridion Interface Connector by inserting the locking spring (1).
7. Install Front according to section 8.1.2.

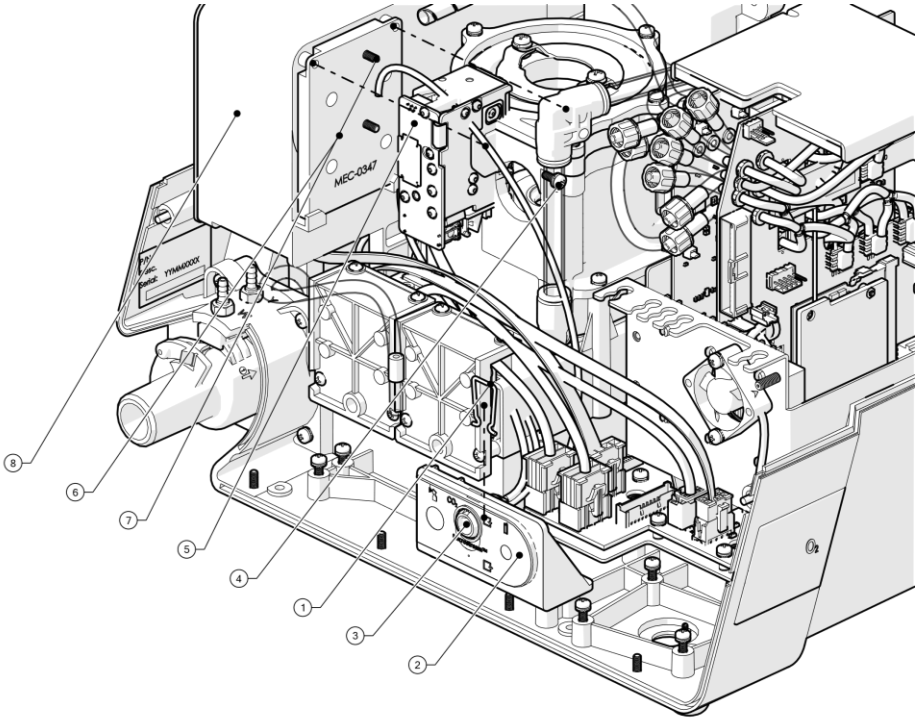

Figure 8-37: Oridion Capnography Module Replacement

8.1.28.5 Return to Service

1. Mark ***Capnography Identification*** test at test tree in section 6.5.3 screen and run the test by clicking on ***Run***.
2. Document the relevant tests and calibration results according to section 10.

8.1.29 Base Board Assy. Replacement

8.1.29.1 Safety

See clause 2

8.1.29.2 Tools and Equipment

- Philips screwdriver
- Component P/N: ELA-0032

8.1.29.3 Base Board – PCBs Removal

1. Remove PCB Cage Cover Assy according to section 8.1.3
2. Remove Power Board (3) according to section 8.1.4.
3. If exists, Remove Extended Board (1) according to section 8.1.5.
4. Remove Main Board (2) according to section 8.1.7.
5. If exists, remove O2 mixer driver (4) according to 8.1.18.

8.1.29.4 Base Board- Cables Removal

1. Remove Front according to section 8.1.2.
2. Disconnect CBL-0256 connector (1) from Base Board.
3. Disconnect CBL-0202 connector (2) from Base Board.
4. If exists, Disconnect CBL-0110/1 connector (3) from Base Board.
5. Disconnect CBL-0106 connector (4) from the Base Board.
6. Disconnect CBL-0104 (5) from Base Board.
7. Disconnect CBL-0117 (7) from Base Board.
8. Disconnect cable CBL-0107 (6) from Base Board.
9. Disconnect cable V60-40200-29 (8) from Base Board.

8.1.29.5 Base Board – Removal

1. Using Philips screwdriver, remove six Philips screws (1) that attach PCB cage base (2) to Ventoux body.
2. Remove PCB cage base with Base Board assy. (2) from Ventoux body.
3. Using Philips screwdriver, remove ten Philips screws (3) that attach Base Board assy. (4) to PCB cage base (5).
4. Carefully slide out Base Board assy. (4) from PCB cage base (5).

8.1.29.6 Base Board – Installation

1. Carefully slide in Base Board assy. (4) into its place in PCB cage base (5).
2. Using Philips screwdriver, install ten Philips screws (3) that attach Base Board assy. (4) to PCB cage base (5).
3. Tighten ten screws (1) to torque of 8 lb-in.
4. Position PCB cage base with Base Board assy. (2) in its place in Ventoux body.
5. Using Philips screwdriver, install six Philips screws (1) that attach PCB cage base (2) to Ventoux body.
6. Tighten six screws (1) to torque of 8 lb-in.

8.1.29.7 Base Board – PCBs Installation

1. Install Power Board (3) according to section 8.1.4.
2. If exists, install Extended Board (1) according to section 8.1.5.
3. Install Main Board (2) according to section 8.1.7.
4. If exists, Install O2 mixer driver (4) according to 8.1.18.

8.1.29.8 Base Board Connectors – Installation

1. Connect CBL-0256 connector (1) to Base Board.
2. Connect CBL-0202 connector (2) to Base Board.
3. If exists, connect CBL-0110/1 connector (3) to Base Board.
4. Connect CBL-0106 connector (4) to the Base Board.
5. Connect CBL-0104 (5) to Base Board.
6. Connect CBL-0117 (7) to Base Board.
7. Connect cable CBL-0107 (6) to Base Board.
8. Connect cable V60-40200-29 (8) to Base Board.
9. Install Front according to section 9.1.2.

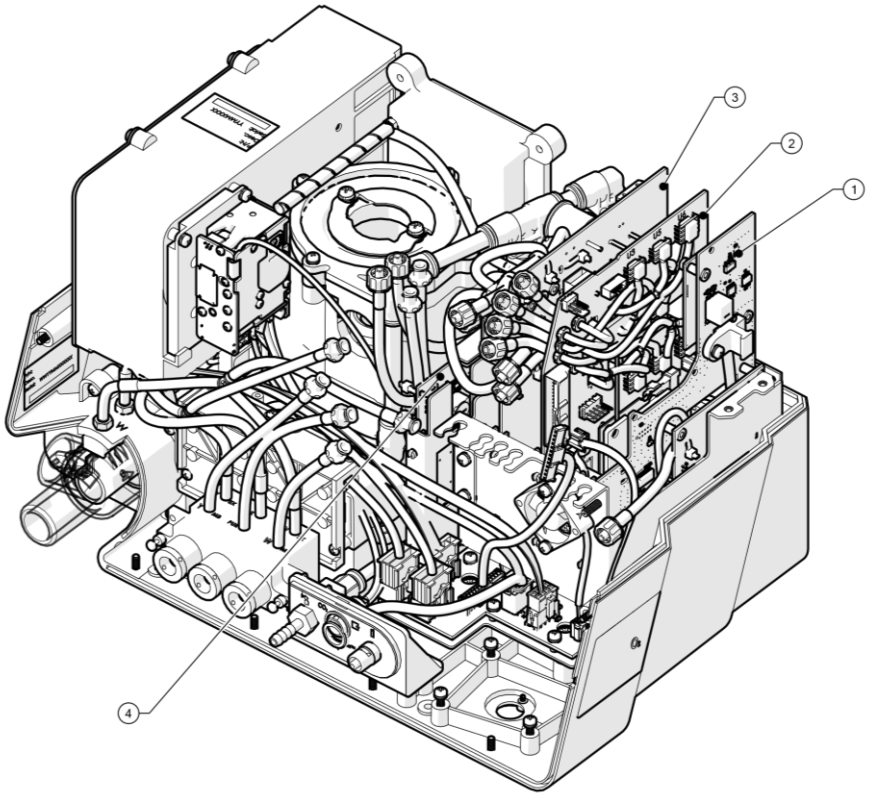

Figure 8-38: Base Board Assy Replacement- PCBs Removal and installation

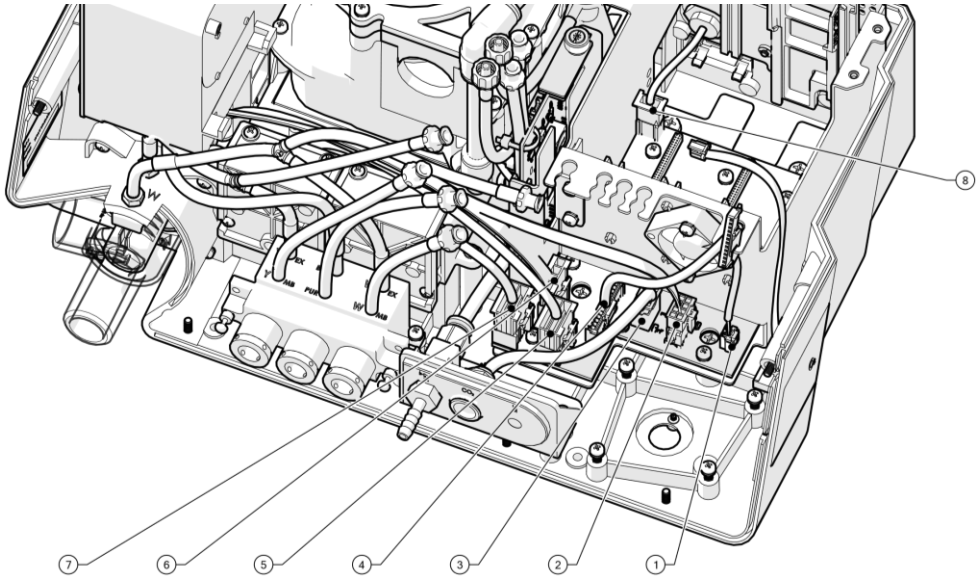

Figure 8-39: Base Board Assy Replacement- Cabels Removal and installation

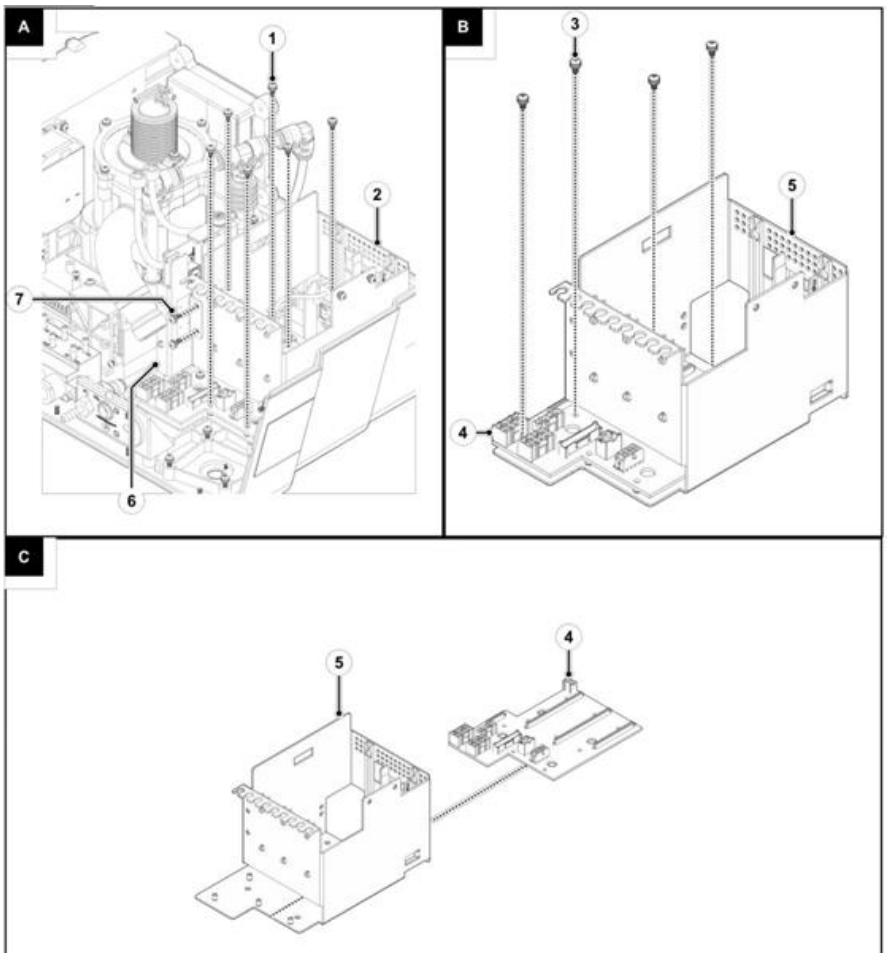

Figure 8-40: Base Board Assy – Removal and Installation

8.1.29.9 Return to Service

1. Mark ***Diagnostics root*** test (all the tests) at test tree in section 6.5.3 screen and run the tests by clicking on ***Run***.
2. Document the relevant tests and calibration results according to section 10.

8.1.30 Display Board Assy Replacement

8.1.30.1 Safety

See clause 2

8.1.30.2 Tools and Equipment

- Philips screwdriver
- Component P/N: ELA-0037

8.1.30.3 Display Board 12” Cover Removal

1. Remove Front according to section 8.1.2.
2. In case of 12” screen, Using Philips screwdriver, remove three Philips screws (2) attach Back Cover for 12” Panel (1) to Front Panel.

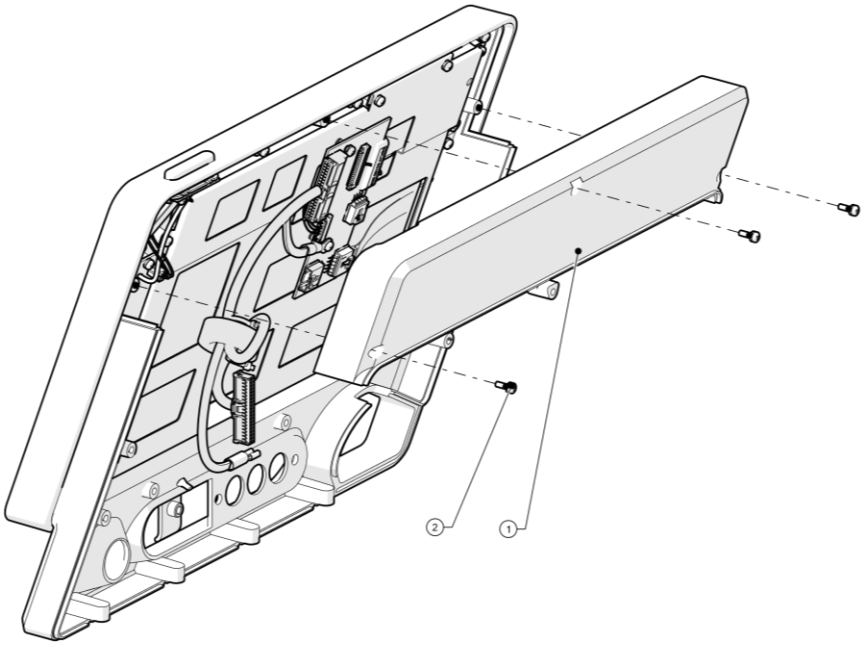

Figure 8-41: Display Board Cover Removal

8.1.30.4 Display Board Cabels Removal

1. Using Philips screwdriver, remove one Philips screw (4) that attaches CBL-0092 cable grounding lug (2) to display board assy (5).
2. Disconnect CBL-0092 cable connector (3) from Display Board assy.
3. Remove CBL-0092 cable from Ventoux Front.
4. <u>In case of 8” screen:</u>
   - Disconnect CBL-0193 (8) from Display Board.
   - Disconnect CBL-0259 (9) from Display Board.
   - Disconnect screen flat cable (1) from Display Board.
5. <u>In case of 12” screen:</u>
   - Disconnect CBL-0194 (7) from Display Board.
   - Disconnect CBL-0195 (6) from Display Board.
   - Disconnect screen flat cable (1) from Display Board.

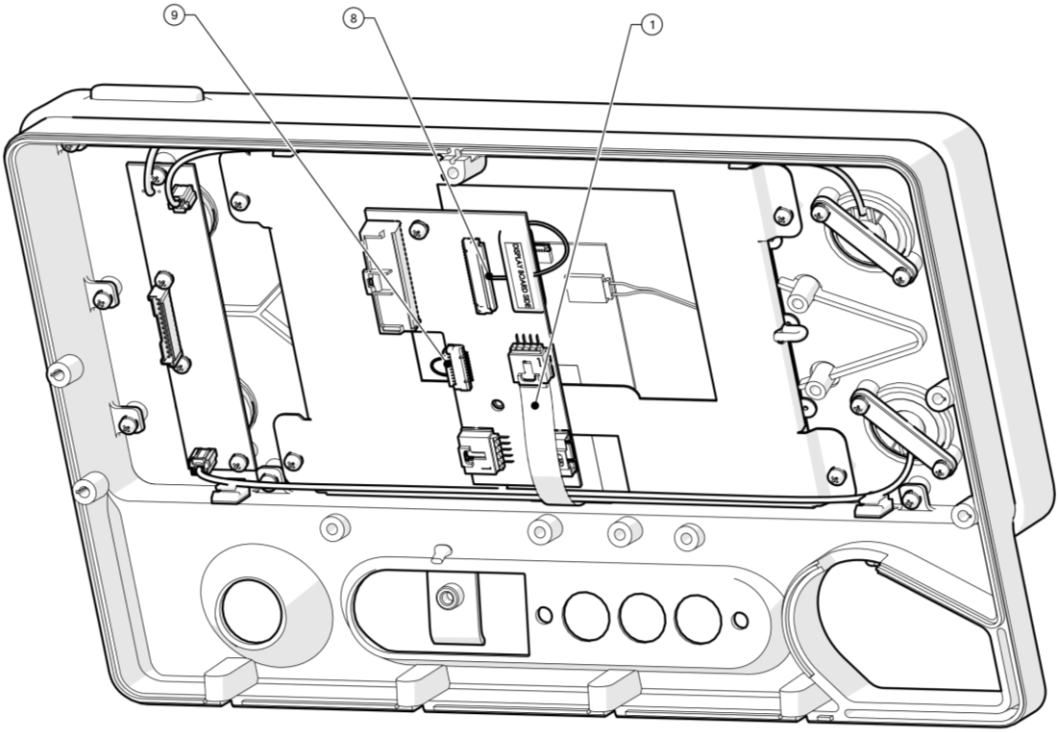

Figure 8-42: Display Board Cables Removal (8")

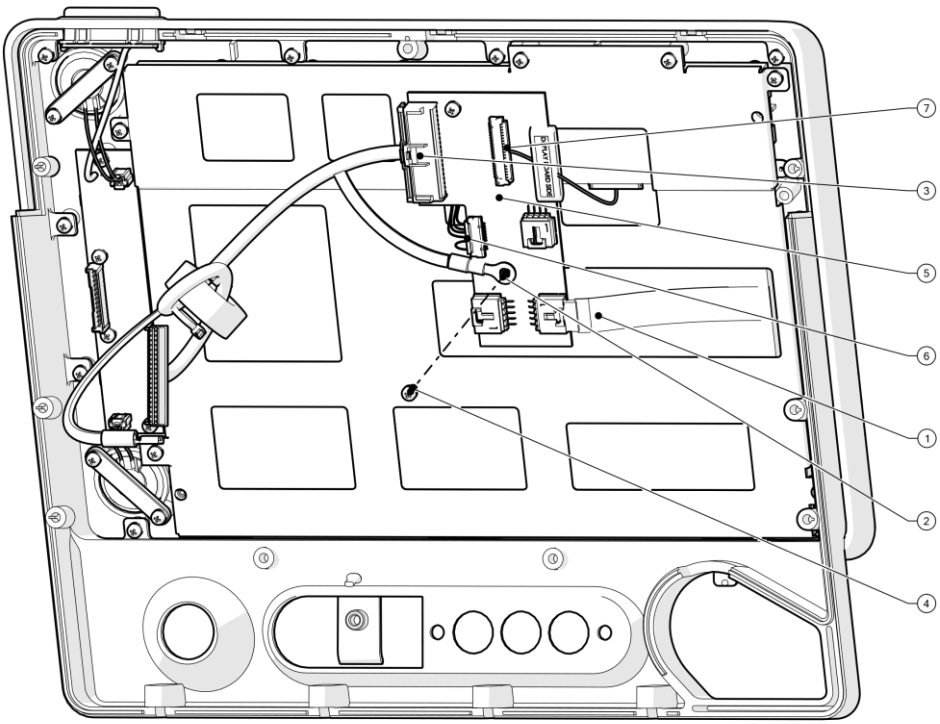

Figure 8-43: Display Board Cables Removal (12")

8.1.30.5 Display Board Assy Removal

1. Using Philips screwdriver, remove one Philips screw (2) that attach Display Board Assy. (3) to Ventoux screen bracket (1).
2. Remove Display Board Assy. (3) from Ventoux Front.

8.1.30.6 Display Board Assy Installation

1. Place Display Board Assy. (3) on Ventoux screen Bracket (1).
2. Using Philips screwdriver, install one Philips screw (2) that attach Display Board Assy. (3) to Ventoux bracket.

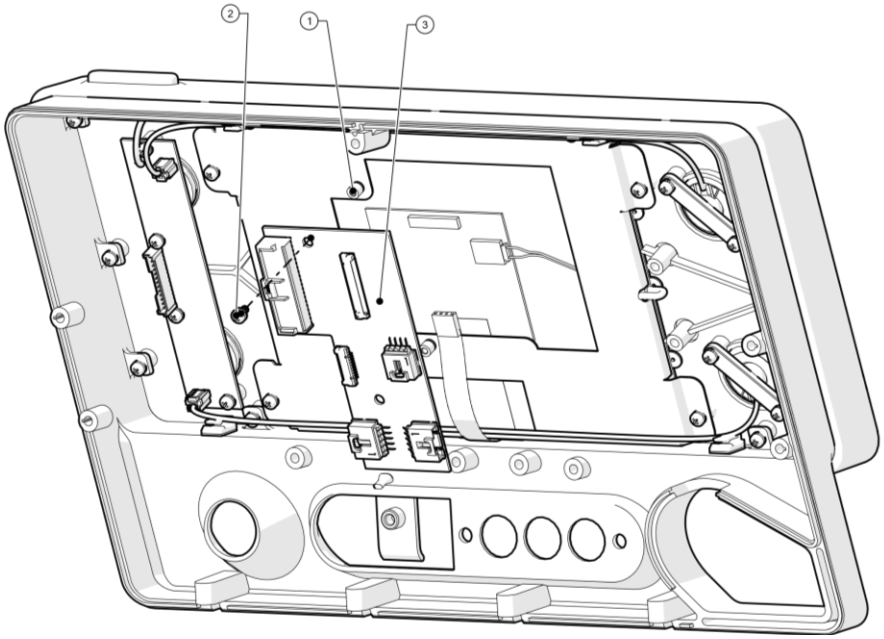

Figure 8-44: Display Board Assy. Replacement

8.1.30.7 Display Board Cables Installation

1. <u>In case of 8" screen:</u>
   - Connect CBL-0193 (8) to Display Board.
   - Connect CBL-0259 (9) to Display Board.
2. <u>In case of 12" screen:</u>
   - Connect CBL-0194 (7) to Display Board.
   - Connect CBL-0195 (6) to Display Board.
3. Connect Screen flat cable (1) to Display Board.
4. Connect CBL-0092 cable connector (3) to Display Board.
5. Using Philips screwdriver, install one Philips screw (4) that attaches CBL-0092 cable grounding lug to display board assy (2).
6. Install Front according to section 8.1.2.

8.1.30.8 Display Board 12" Cover Installation

1. In case of 12" screen, Using Philips screwdriver, install three Philips screws (2) attach Back Cover for 12" Panel (1) to Front Panel.
2. Install Front according to section 8.1.2.

8.1.30.9 Return to Service

1. Mark ***Display Board*** and ***Front Board*** tests at test tree in section 6.5.3 screen and run the tests by clicking on ***Run***.
2. Document the relevant tests and calibration results according to section 10.

8.1.31 Base Board - Front Panel Cable Replacement

8.1.31.1 Safety

See clause 2

8.1.31.2 Tools and Equipment

- Philips screwdriver
- Component P/N: CBL-0106

8.1.31.3 Base Board - Front Panel Cable Removal

1. Remove Front according to section 8.1.2
2. Disconnect CBL-0106 cable connector from Base Board connector (2).
3. Remove CBL-0106 cable (1) from Ventoux.

8.1.31.4 Base Board - Front Panel Cable Installation

1. Connect CBL-0106 cable connector to Base Board connector (2).
2. Install Front according to section 8.1.2.

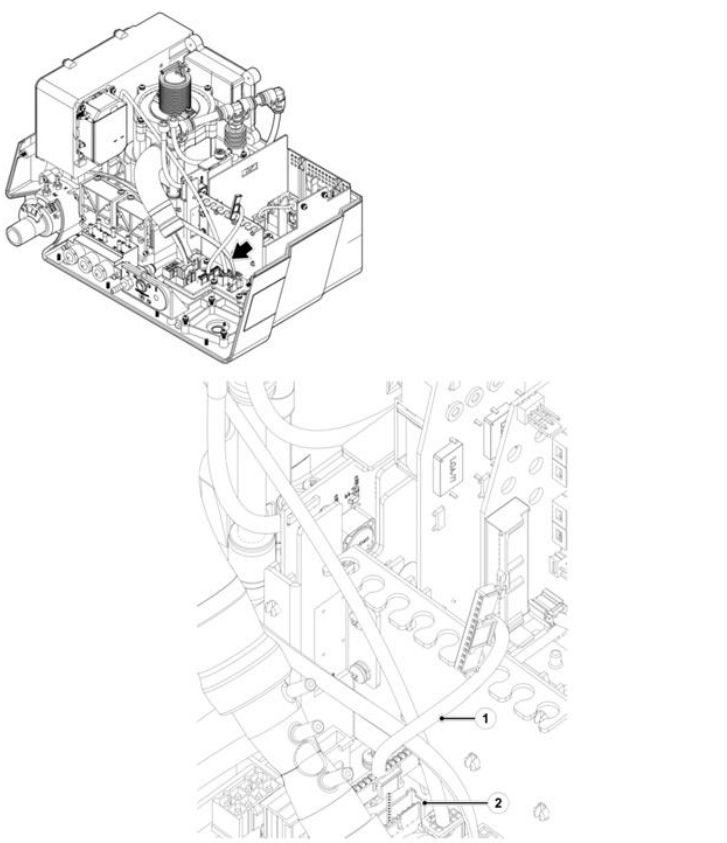

Figure 8-45: Base Board - Front Panel Cable Replacement

8.1.31.5 Return to Service

1. Mark ***Display Board*** test at test tree in section 6.5.3 screen and run the tests by clicking on ***Run***.
2. Document the relevant tests and calibration results according to section 10.

8.1.32 Outlet Assy Replacement

8.1.32.1 Safety

See clause 2

8.1.32.2 Tools and Equipment

- Philips screwdriver
- 0.9mm Hex Allen Key (for calibration purpose according section 8.1.32.5)
- Component P/N: SUB-0253

8.1.32.3 Outlet Assy. Removal

1. Remove Oxygen Sensor according to section 8.1.20.
2. Remove Front according to section 8.1.2.
3. Disconnect two quick connectors fittings connecting Outlet Assy to Power Board.
4. Disconnect one quick connector fitting connecting Outlet Assy to Main Board.
5. Philips screwdriver, remove four Philips screws (1) that attach Outlet Assy. (2) to Ventoux body (3).
6. Remove Outlet Assy. (2) from Ventoux by disconnecting tube from blower assy. (4).

8.1.32.4 Outlet Assy. Installation

1. Place Outlet Assy. (2) in its place in Ventoux body (3).
2. Properly connect silicone tube from Turbine Assy to the Outlet venturi tube (4).
3. Using Philips screwdriver, install four Philips screws (1) that attach Outlet Assy. (2) to Ventoux body (3).
4. Tighten four screws (1) to torque of 8 lb.-in.
5. Connect two quick connectors fittings from Outlet Assy to Power Board.
6. Connect one quick connector fitting from Outlet Assy to Main Board.
7. Install Front according to section 8.1.2.
8. Install Oxygen Sensor according to section 8.1.20.

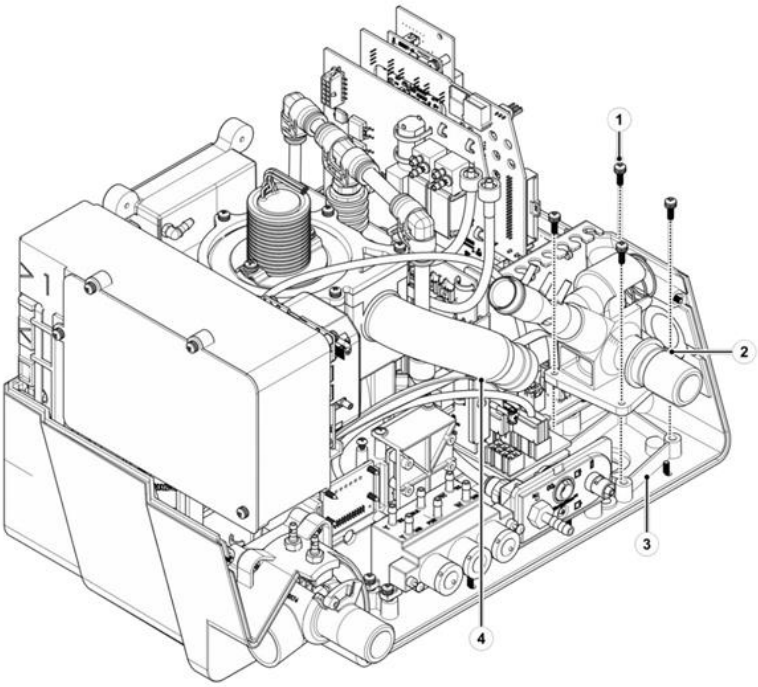

Figure 8-46: Outlet Assy. Replacement

8.1.32.5 Return to Service

1. Perform ***Overpressure Valve Calibration*** according section 6.1.3.
2. Mark ***FIO2 Identification*** and ***Leak Test*** tests in test tree in section 6.5.3 screen and run the tests by clicking on ***Run.***
3. Document the relevant tests and calibration results according to section 10.

8.1.33 Nellcor Panel Interface Cable Replacement

8.1.33.1 Safety

See clause 2

8.1.33.2 Tools and Equipment

- Philips screwdriver
- Component P/N: CBL-0126

8.1.33.3 Nellcor Panel Interface Cable Removal

1. Remove Top Cover according to section 8.1.1.
2. Remove PCB Cage Cover Assy according to section 8.1.3
3. Using Philips screwdriver, remove one Philips screw (1) that attaches CBL-0126 connector guide (2) to Nellcor SPO2 PCBA.
4. Disconnect CBL-0126 (3) from to Nellcor SPO2 PCBA connector.
5. Remove connector guide from CBL-0126 (2).
6. Using Philips screwdriver, remove two Philips-flat head screws (5) that attach CBL-0126 connector panel (4) to the back of Ventoux body.
7. Gently remove the cable and panel from Ventoux body.
8. Gently disconnect the SPO2 connector panel from the cable (4).

8.1.33.4 Nellcor Panel Interface Cable Installation

1. Connect the SPO2 connector panel on CBL-0126 connector (4).
2. Insert and properly route CBL-0126 (3) from back of Ventoux body to Nellcor SPO2 PCBA connector.
3. Using Philips screwdriver, install two Philips-head screws (5) that attach CBL-0126 connector panel (4) to back of Ventoux body.
4. Tighten screws (5) to torque of 8 lb.-in.
5. Position CBL-0126 connector guide (2) on CBL-0126 (3) connector.
6. Connect CBL-0126 connector guide (3) to Nellcor SPO2 PCBA connector.
7. Using Philips screwdriver, install one Philips-head screw (1) that attach CBL-0126 connector guide (2) to Nellcor SPO2 PCBA.
8. Tighten screw (1) to torque of 8 lb.-in.
9. Install PCB Cage Cover Assy according to section 9.1.3.
10. Install Top Cover according to section 9.1.1.

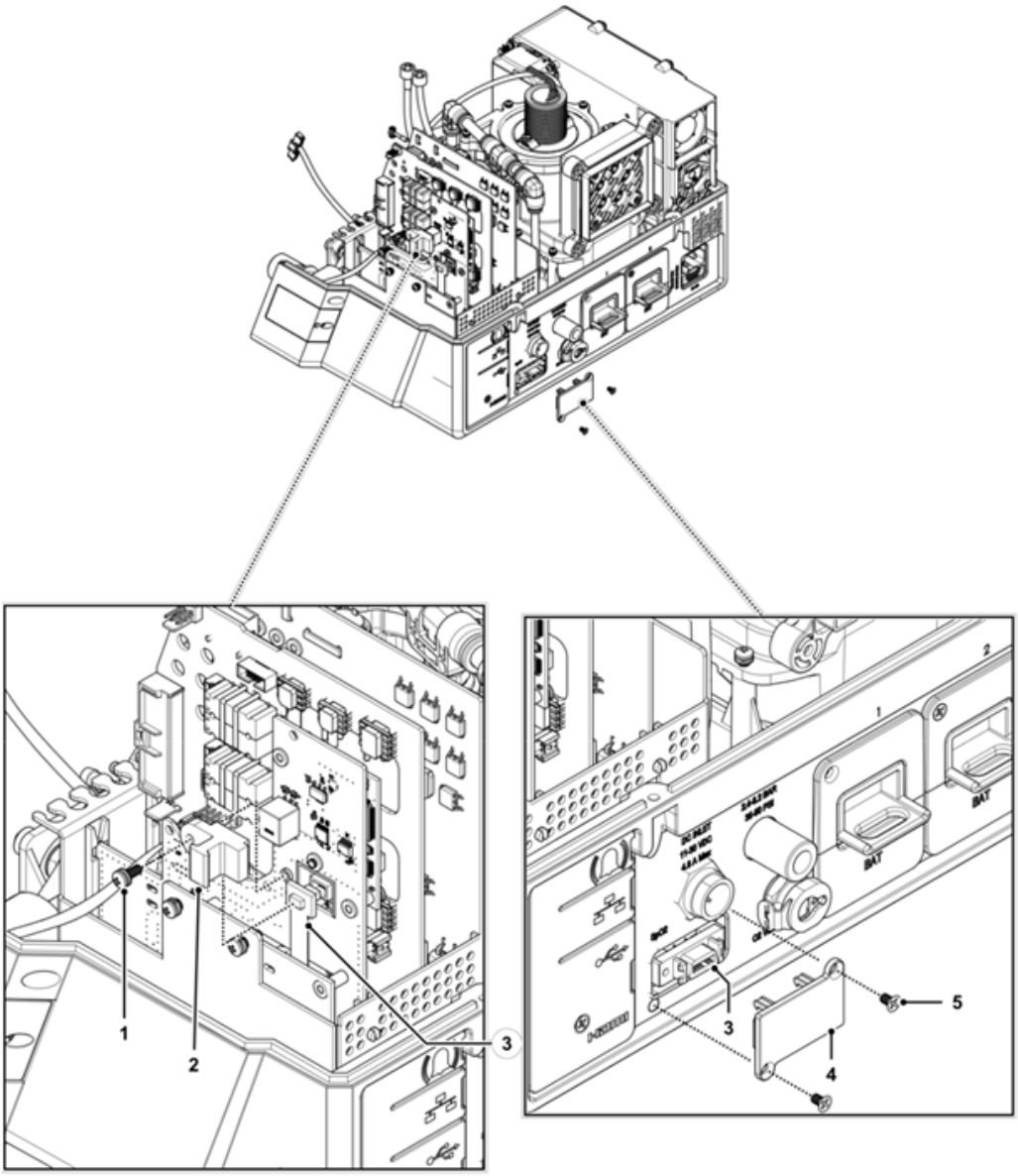

Figure 8-47: Nellcor Panel Interface Cable Replacement

8.1.33.5 Return to Service

1. Mark ***SPO2 Identification*** test at test tree in section 6.5.3 screen and run the test by clicking on ***Run***.
2. Document the relevant tests and calibration results according to section 10.

8.1.34 Battery Replacement

8.1.34.1 Safety

See clause 2

8.1.34.2 Tools and Equipment

- Philips screwdriver
- Component P/N: SUB-0267

8.1.34.3 Battery Removal

The removal procedure for both Batteries is identical.

1. Using Philips screwdriver, remove one Philips screw (3) that attach Battery (2) to Ventoux aperture (3).
2. Press down the battery latch while pulling it (2) from Ventoux aperture (1).

8.1.34.4 Battery Installation

The installation procedure for both Batteries is identical.

1. Slide in the Battery (2) into its aperture (1) in the Ventoux.
2. When available, Using Philips screwdriver, install one Philips screw (3) that attach Battery (2) to Ventoux aperture (1).

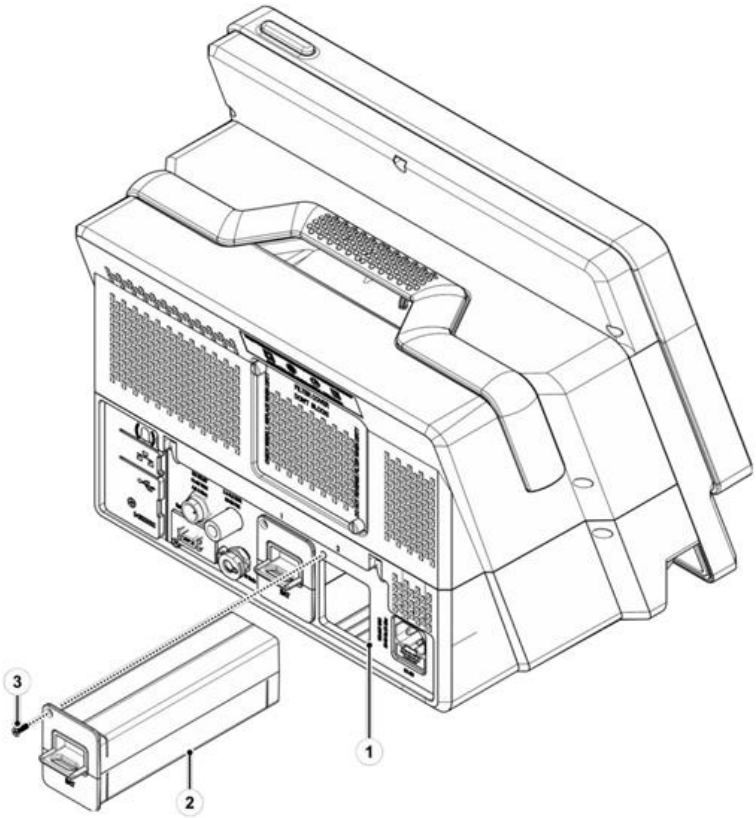

Figure 8-48: Battery Removal and Installation

8.1.34.5 Return to Service

1. Mark ***Battery Housing Board*** test at test tree in section 6.5.3 screen and run the tests by clicking on ***Run***.
2. Document the relevant tests and calibration results according to section 10.

8.1.35 LCD Screen Replacement

8.1.35.1 Safety

See clause 2

8.1.35.2 Tools and Equipment

- Philips screwdriver
- Component P/N: LCD-0009 / LCD-0010

8.1.35.3 LCD Screen Removal

The removal procedure for LCD is identical for both 8” and 12” screens.

1. Remove Front according to section 8.1.2.
2. Remove Display Board according to section 8.1.30.
3. Using Philips screwdriver, remove six Philips screws (1) that secure Screen Bracket (2) to Front Panel.
4. Remove the LCD screen from its aperture.
5. Make sure LCD Gasket stays in its place on the Front Panel.

8.1.35.4 LCD Screen Installation

The installation procedure for LCD is identical for both 8” and 12” screens.

1. Prior installation, Make sure LCD Gasket in its place.
2. Place LCD Screen in its place by adjust the two pins in the Front panel to their corresponding hols in the LCD screen.
3. Using Philips screwdriver, install six Philips screws (1) that secure Screen Bracket (2) to Front Panel.
4. Tighten screw (1) to torque of 8 lb.-in.
5. install Display Board according to section 8.1.30.
6. Install Front according to section 8.1.2.
7. Install Top Cover according to section 8.1.1.

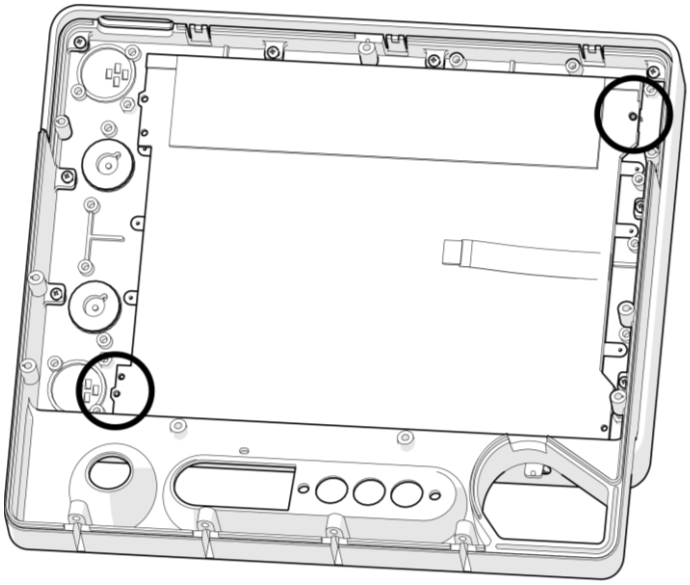

Figure 8-49: Pins Adjustment

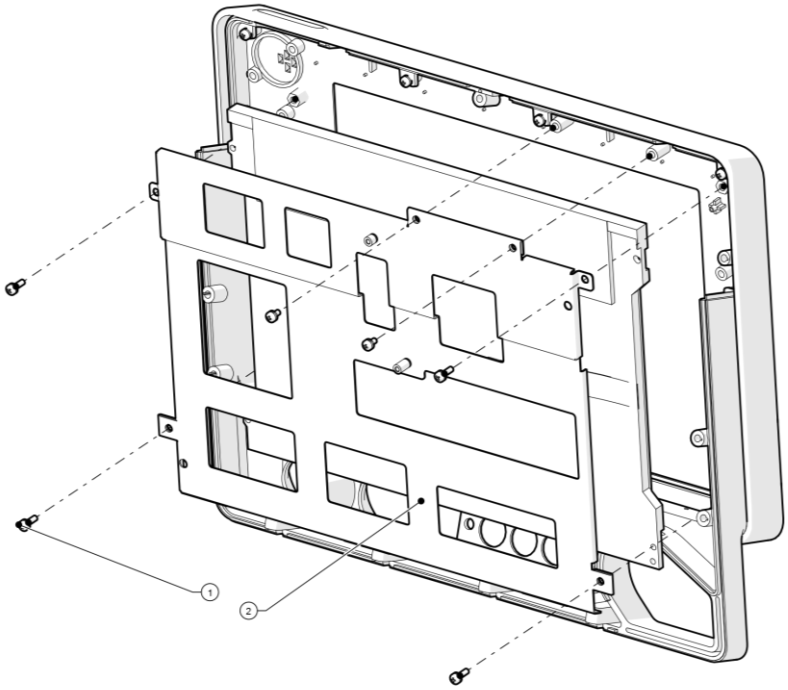

Figure 8-50: LCD Screen Replacement

8.1.35.5 Return to Service

1. Perform ***Touch Screen Calibration*** section 6.2.6.
2. Mark ***Display Board*** and ***Front Board*** test at test tree in section 6.5.3 screen and run the test by clicking on ***Run***.
3. Document the relevant tests and calibration results according to section 10.

8.1.36 SOM Assy Replacement

8.1.36.1 Safety

See clause 2

8.1.36.2 Tools and Equipment

- Philips screwdriver
- Component P/N: SUB-0454

8.1.36.3 SOM Assy Removal

1. If applicable, prior the removal of SOM Assy, update software package to the latest version according to section 12.1.
2. If applicable, prior the removal of SOM Assy, perform ***Export Files*** to ***Settings*** according to section 6.2.4.

3. Remove Main Board according to section 8.1.7.3.
4. Using Philips screwdriver, remove two Philips flat-head screws (1) that attach SOM Assy (3) to Main Board (2).
5. Remove SOM Assy by opening the two snaps locking the SOM to Main Board.

8.1.36.4 SOM Assy Installation

1. Manually slide in the SOM assy. (3) to the Base Board (2).
2. Connect the SOM Assy to Main Board by pushing it to its place.
3. Using Philips screwdriver, install two Philips flat-head screws (1) that attach SOM Assy (3) to Main Board (2).
4. Install Main Board according to section 8.1.7.4.
5. Install Top Cover according to section 8.1.1.4.

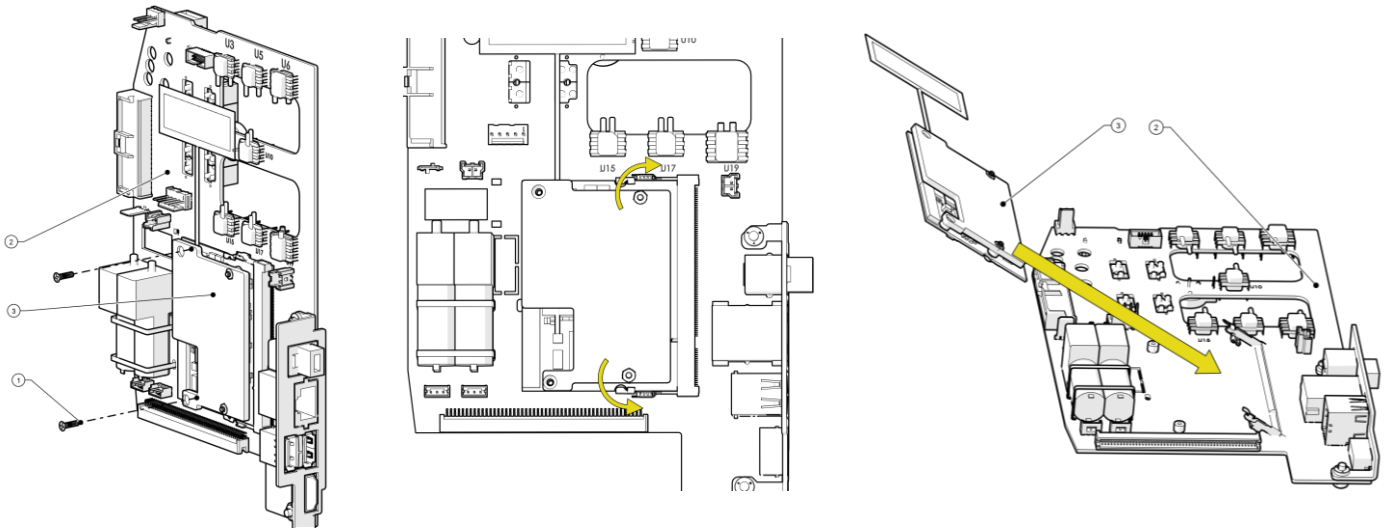

Figure 8-51: SOM Assy Replacement

8.1.36.5 Return to Service

1. Perform ***Touch Screen Calibration*** section 6.2.6.
2. Perform ***Software Update*** according to section 12.1.1.6.
3. If needed, perform ***System Clock Setup*** according to section 6.4.3.
4. If applicable, perform ***Import Files*** to ***Settings*** according to section 6.2.4.
5. If additional features were applicable and activated prior to the SOM replacement, re-enter the activation keys in the ***Activation Key*** field according section 6.4.7.
6. When SOM with WIFI is available, connect to a WIFI network according to section 6.4.5.
7. Mark ***Diagnostics root*** test (all the tests) at test tree according to section 6.5 and run the tests by clicking on ***Run***.
8. Document the relevant tests and calibration results according to section 10.

8.1.37 First Assembly Stage of O2 Mixer Replacement

8.1.37.1 Safety

See clause 2

8.1.37.2 Tools and Equipment

- Philips screwdriver
- Cutter
- Component P/N: SUB-0552

8.1.37.3 First Assembly Stage of O2 Mixer Removal

1. Remove Internal Mixer (1) according to section 8.1.13.
2. Remove Pressure Sensor (2) from Internal Mixer according to section 8.1.17.
3. Remove Valve Nebulizer SRS (3) according to section 8.1.14.
4. Remove Proportional Valve (4) according to section 8.1.15.
5. Remove Regulator (5) according to section 8.1.16.
6. Remove O-ring (6) between the regulator and the O2 Mixer.
7. Release Tee quick connector (7) from top of O2 internal mixer.
8. Disconnect two silicone (8) tubes from Mixer venturi tube.
9. Disconnect straight fitting (9) attaches nebulizer tube to Connectors Interface Panel.

8.1.37.1 First Assembly Stage of O2 Mixer Installation

1. Place O-ring between the regulator and the O2 mixer.
2. Install Regulator according to section 8.1.16.
3. Install Valve Nebulizer SRS according to section 8.1.14.
4. Install Proportional Valve according to section 8.1.15.
5. Install Pressure Sensor to Internal Mixer according to section 8.1.17.
6. Connect Tee quick connector from top of O2 internal mixer.
7. Connect two silicone tubes to Mixer venturi tube.
8. Connect straight fitting attaches nebulizer tube to Connectors Interface Panel.
9. Install Internal Mixer according to section 8.1.13.

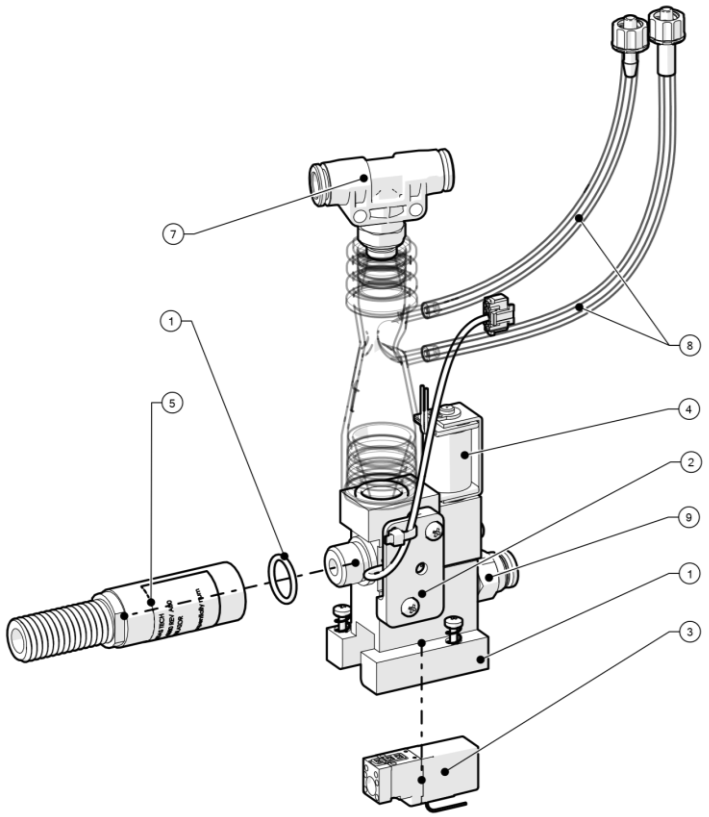

Figure 8-52: First Assembly Stage of O2 Mixer Replacement

8.1.37.2 Return to Service

1. Perform the following calibrations:
   - ***O2 Flow Sensors Calibration*** according to section 6.1.2.
   - ***Pneumatic System Calibration*** according section 6.1.4.
2. Mark ***O2 Mixer Board*** test at test tree in section 6.5.3 screen and run the test by clicking on ***Run***.
3. Document the relevant tests and calibration results according to section 10.

8.1.38 Batteries – Base Board Cable Assy Replacement

8.1.38.1 Safety

See clause 2

8.1.38.2 Tools and Equipment

- Philips screwdriver
- Component P/N: CBL-0104 / CBL-0117

8.1.38.3 Batteries – Base Board Cable Assy Removal

1. Remove Front According to section 8.1.2.
2. Disconnect Battery cable connector (1) from Base Board.
3. Using Philips screwdriver, Release Threeway Valve four screws for better access.
4. Using Philips screwdriver, release four screws (3) attaching Battery Cable Support (4) to Ventoux main body.
5. Using Philips screwdriver, release four screws (5) attaching Battery Cable Support to Battery cable (6).

8.1.38.4 Batteries – Base Board Cable Assy Installation

1. Using Philips screwdriver, manually tighten four screws attaching Battery Cable Support to Battery cable.
2. Using Philips screwdriver, manually tighten four screws attaching Battery Cable Support to Ventoux main body.
3. Connect Battery cable connector to Base Board.
4. Using Philips screwdriver, install Threeway Valve’s four screws.
5. Tighten screws to torque of 8 lb.-in.
6. Install Front According to section 8.1.2.

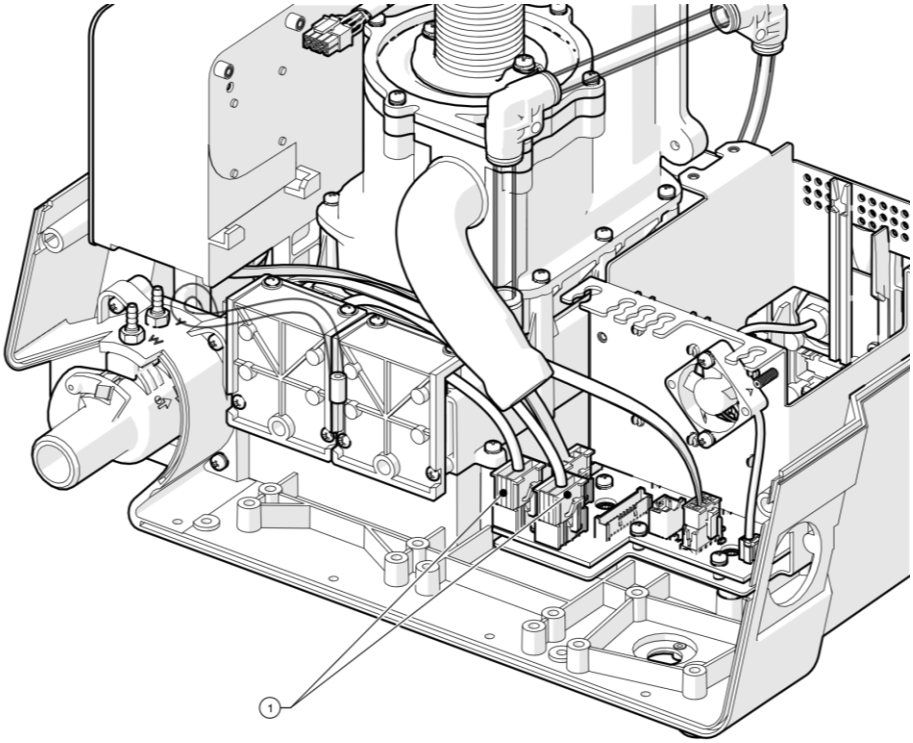

Figure 8-53: Batteries – Base Board Cable Assy Replacement (1 of 3)

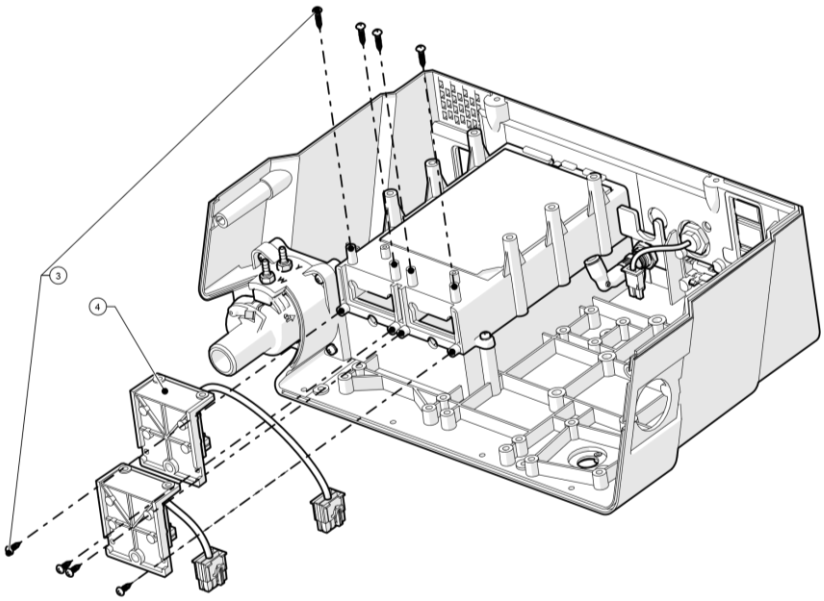

Figure 8-54: Batteries – Base Board Cable Assy Replacement (2 of 3)

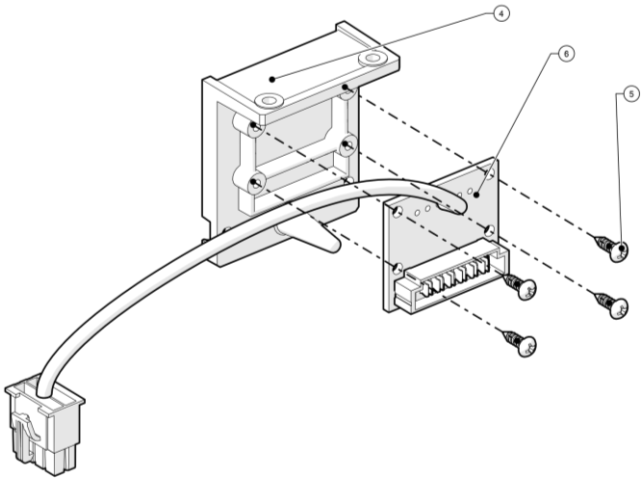

Figure 8-55: Batteries – Base Board Cable Assy Replacement (3 of 3)

8.1.38.5 Return to Service

1. Mark ***Battery Housing Board*** test at test tree in section 6.5.3 screen and run the tests by clicking on ***Run***.
2. Document the relevant tests and calibration results according to section 10.

9 Ventoux Components Part Numbers

All Ventoux parts numbers are divided into four categories:

- Boards
- Cables
- Varied Assemblies
- O2 Mixer

9.1 Boards

Table 9-1: Boards Part Numbers

Item No.	P/N	Description
1	SUB-0268	VX-MB Assy With Tubes
2	SUB-0281	VX-PB Assy With Tubes
3	SUB-0249	VX-O2 Mixer Driver Assy with Tubes
4	SUB-0476	VX-Front Board Assy-Alarm Board
5	CBL-0117	VX-Battery-2-Base Board Cable Assy
6	ELA-0032	VX-Base Board Assy
7	CBL-0104	VX-Battery-1-Base Board Cable Assy
8	ELA-0031	VX-Extended Board Assy
9	ELA-0037	Display board assembly
10	SUB-0474	VX-CUFF Control Board with Tubs Assy
11	SUB-0310	VX-Nellcor SpO2 PCBA
12	SUB-0451	VX-MicroMediCO2 Module (internal solution)
13	SUB-0454	VX-SOM Assy

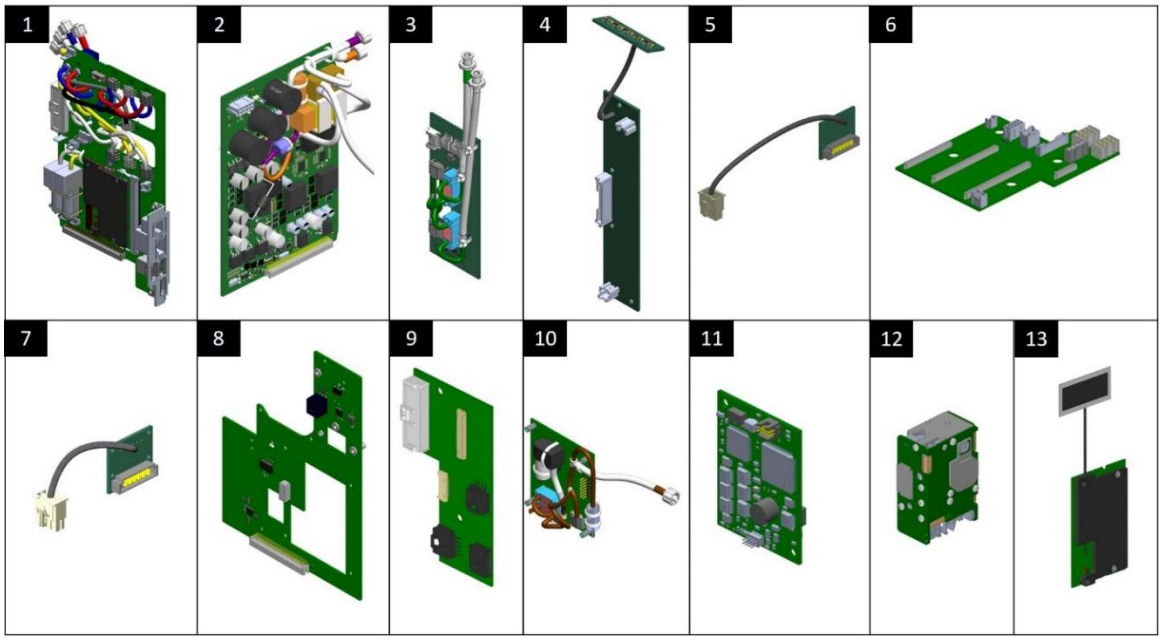

Figure 9-1: Ventoux Boards

9.2 Cables

Table 9-2: Cables Part Numbers

Item No.	P/N	Description
1	CBL-0106	VX-Base Board-Front Panel Cable
2	CBL-0092	VX-Display board - Main Board LVDS Cable
3	CBL-0110	VX-Oridion Cable Base Board-Oridion module
4	CBL-0126	VX-Nellcor Panel Interface (PI) Cable
5	CBL-0111	VX-Philips Capnography Cable Base Board-Front Panel
6	CBL-0129	VX-O2 Pressure Sensor-O2 Board Cable Assy
7	SUB-0269	VX-Speaker Assy for Front Panel 12"
8	SUB-0325	VX-Speaker Assy for Front Panel 8"
9	CBL-0193	VX-Cable LVDS for display 8"
10	CBL-0194	VX-Cable LVDS for display 12"
11	CBL-0195	VX-Cable Backlight for Display 12"
12	CBL-0259	8” Screen Identification Cable

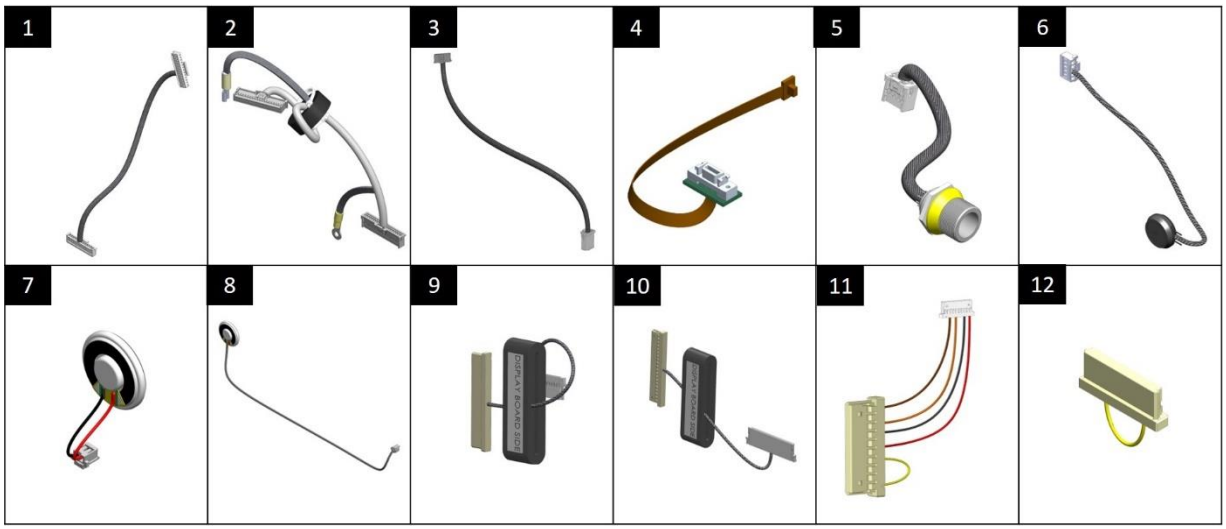

Figure 9-2: Ventoux Cables

9.3 Varied Assemblies

Table 9-3: Varied Assemblies Part Numbers

Item No.	P/N	Description
1	G60-25000-29	Oxygen Sensor
2	SUB-0248	VX-Blower Assy
3	SUB-0324	VX-Blower One Way Valve Cassette Subassy
4	PWR-0005	VX-AC/DC Power Supply Single-OUT 24V 8.33A
5	SUB-0258	VX-Power Supply Assy
6	SUB-0261	VX-Three-way valve Assy
7	SUB-0253	VX-Outlet Assy
8	LCD-0010	VX-12.1” TFT LCD Module with 5 Wire Resistive Touch
9	LCD-0009	VX-8” TFT LCD Module with 4 Wire Resistive Touch
10	MEC-0174	VX-Exhalation Valve
11	SUB-0267	VX-Battery Assy
12	V64-11200-06	Dual Limb Diaphragm Silicon
13	MEC-0185	VX-PS Housing Body

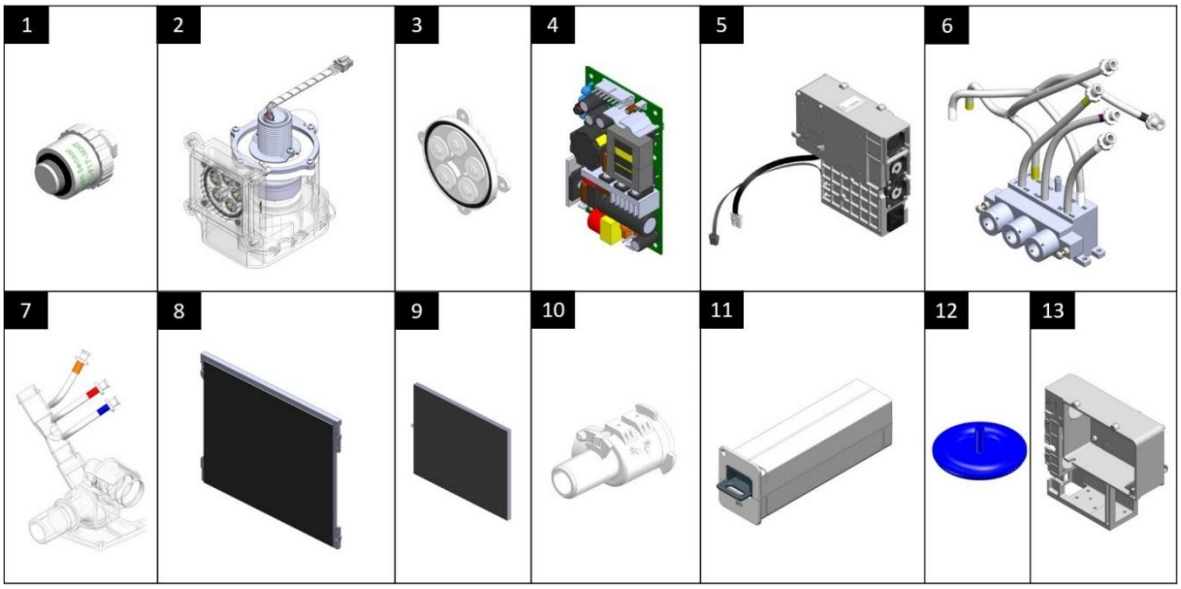

Figure 9-3: Ventoux Varied Assemblies

9.4 O2 Mixer

Table 9-4: O2 Mixer Part Numbers

Item No.	P/N	Description
1	SUB-0473	VX-Internal Mixer Subassy
2	SUB-0492	Regulator Subassy
3	SUB-0263	VX-SUB Valve Proportional VSO-MAX - Oxygen
4	SUB-0262	VX-Valve Nebulizer SRS - Nebulizer
5	SUB-0552	VX-First Assembly Stage of Internal Oxygen Mixer

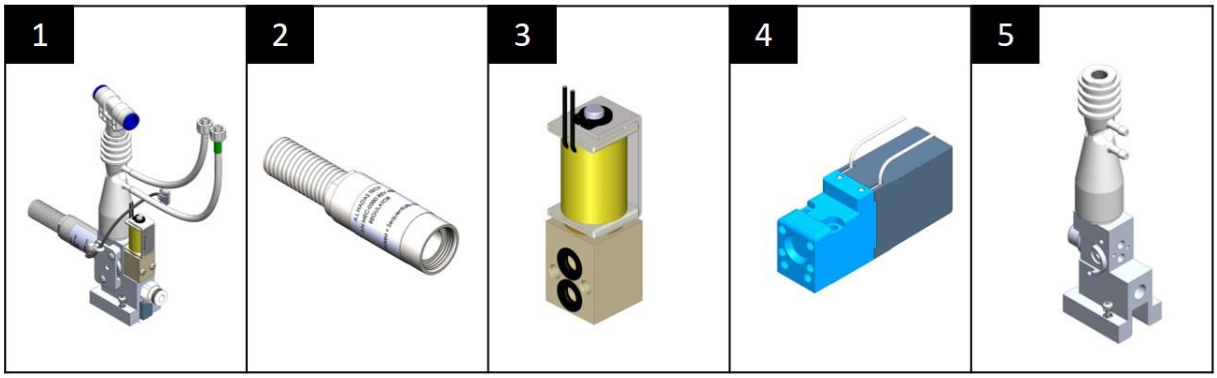

Figure 9-4: O2 Mixer Parts

10 Operation Verification Procedure

Perform the necessary tests and calibrations needed and record the results in table 10-1.

Ventilator Serial No.:	**Ventilator P/N:**	**SW Version:**
Tested by:	**Date:**	**Signature:**

Table 10-1: Tests/Calibrations Results

#	Test/Calibration	Results
10.1	Touch Screen Calibration	☐Pass ☐Fail ☐N/A
10.2	Flow Sensors	☐Pass ☐Fail ☐N/A
10.3	O_2 Flow Sensors	☐Pass ☐Fail ☐N/A
10.4	Overpressure valve	☐Pass ☐Fail ☐N/A
10.5	Pneumatic System	☐Pass ☐Fail ☐N/A
10.6	FiO_2 Sensor	☐Pass ☐Fail ☐N/A
10.7	Oridion Capnography Device	☐Pass ☐Fail ☐N/A
10.8	System Diagnostics	☐Pass ☐Fail ☐N/A

Run ventilation according the set parameters in table 10-2 and record the following results in the table 10-3:

Table 10-2: Ventilation Set Parameters

Mode	**Parameters**		**Artificial lung values**	
AC-VC	Rate	15	Rp	5
	Ti	1.0	C	0.02
	VT	500		
	PEEP	5		
	P. Trigger	-2.0		
	Waveform	Descend		
	Pressure Alarm max limit	99		

Table 10-3: Ventilation Test Run

#	Test	Values				Result
10.9	PEEP	**PEEP (cmH_2O)**	**Tolerance**	**P trig Limit**	**PEEP**	
		5	4 - 6	<= -1.5		☐Pass ☐Fail ☐N/A
10.10	Volume Control	**Set**	**Vt (ml)**	**Vti Vent**	**Vte Vent**	
		500 R5/C50	450 -550			☐Pass ☐Fail ☐N/A
10.11	Oxygen Test	**O_2 (LPM)**		**Tolerance**	**Actual**	
		AIR (21%)		20.9% - 22%		☐Pass ☐Fail ☐N/A
		40PSI (2.5Bar) - 100%		95% - 105%		☐Pass ☐Fail ☐N/A
10.12	SPO_2			**Target**	**Actual**	
		SpO_2		>80		☐Pass ☐Fail ☐N/A
		P Rate		>60 <100		☐Pass ☐Fail ☐N/A
10.13	$etCO_2$	N/A				☐Pass ☐Fail ☐N/A

Module	Category	Tests	Calibrations						Updates/Test Run
		Diagnostics	Touch Screen	Flow Sensors	O_2 Flow Sensors	Overpressure valve	Pneumatic System	FiO_2 Sensor	
8.1.2	**Front**	✓	✓						
8.1.4	**Power Board**	✓					✓		
8.1.6	**Nellcor SpO_2**	✓							SPO_2 Test Run
8.1.7	**Main Board**	✓	✓	✓		✓	✓	✓	•SW Update •MB Update •System Clock Setup •Import Files •Additional Features Keys
8.1.8	**Cuff Control Board**	✓							
8.1.9	**Front - Alarm Board**	✓							
8.1.10	**Display Board - Main Board LVDS Cable**	✓							
8.1.11	**Speakers**	✓							
8.1.12	**Exhalation Valve**	✓					✓		
8.1.13	**Internal Mixer**	✓			✓		✓		
8.1.14	**Nebulizer Valve**	✓							
8.1.15	**Proportional Valve**	✓					✓		
8.1.16	**Regulator**	✓					✓		
8.1.17	**O_2 Pressure Sensor**	✓							Oxygen Test Run
8.1.18	**O_2 Mixer Driver**	✓			✓				Oxygen Test Run
8.1.19	**Dual Limb Diaphragm**						✓		
8.1.20	**O_2 Sensor**	✓						✓	Oxygen Test Run
8.1.21	**Power Supply Assy**	✓							
8.1.22	**AC/DC Power Supply Single**	✓							
8.1.23	**Blower Assy**	✓		✓	✓	✓	✓	✓	Turbine Replacement
8.1.24	**Threeway Valve**	✓							
8.1.26	**Philips Capnography Cable**	✓							$etCO_2$ Test Run
8.1.27	**Oridion Capnography Cable**	✓							$etCO_2$ Test Run

8.1.28	**Oridion Capnography Module**	✓							$etCO_2$ Test Run
8.1.29	**Base Board**	✓							
8.1.30	**Display Board**	✓							
8.1.31	**Base Board – Front Panel**	✓							
8.1.32	**Outlet Assy**	✓				✓			
8.1.33	**Nellcor Cable**	✓							SPO_2 Test Run
8.1.34	**Battery**	✓							
8.1.35	**LCD Screen**	✓	✓						
8.1.36	**SOM Assy**	✓	✓						•SW Update •System Clock Setup •Import Files •Additional Features Keys
8.1.37	**First assembly O_2 Mixer**	✓			✓		✓		
8.1.38	**Batteries - Base Board Cable**	✓							

11 Repackaging and Shipping

All returned items must have a Return Goods Authorization (RGA) number, assigned by FLIGHT MEDICAL.

To obtain an RGA number, email a completed RGA form (filled in its entirely) to support@flight-medical.com. Also include the ventilator's log files and a detailed description of the failure analysis and the repair efforts undertaken.

Items can be returned only after an RGA number was provided by FLIGHT MEDICAL.

Copies of the RGA form and the Service Call should be included with the returned item.

RGA Returns

Use the following guidelines to return a Ventoux ventilator:

- Use the original box and packaging.
- Remove both batteries and any accessories from the ventilator.
- When returning a module, place it in the original box and packaging. If not available, place it in a box large enough to allow for it to be wrapped in a sufficient amount of packaging material.
- Write the RGA number on the shipping label.
- Send tracking information to support@flight-medical.com

Note: Please follow the above instruction when shipping back parts. Make sure to pack the parts in appropriate box and use sufficient amount of packing material to protect the parts that are sent back to Flight-Medical.

Ship RGA items to:

FLIGHT MEDICAL INNOVATIONS Ltd.

7 Hatnufa St,

Petah Tikva 4951025, ISRAEL

Tel: +972-3-6731660

12 Appendices

12.1 Software Update Work Instructions

12.1.1.1 Safety

See clause 2

12.1.1.2 Tools and Equipment

- Philips screwdriver
- SD Card
- 3x Jumper 2.54mm
- Disk on key containing updated software

12.1.1.3 Mechanial Preperations

1. Remove Top Cover according to section 8.1.1.
2. Remove PCB Cage Cover Assy according to section 8.1.3.

12.1.1.4 Electrical Preperations

1. Insert SD card to SD card slot on top of **Main Board** with golden stripes towards the PCB and lightly press it until a click is heard.

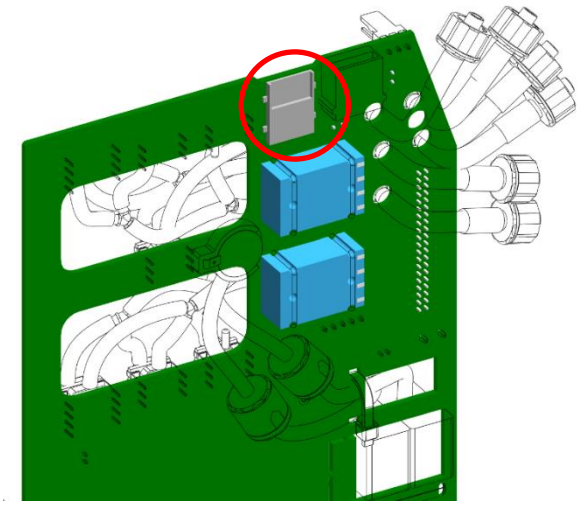

Figure 12-1: SD Card Slot in Main Board

2. Insert a jumper to "SD Boot" (J23) in **Main Board**.
3. Insert a jumper to "MCU Boot" (JP2) in **Main Board**.

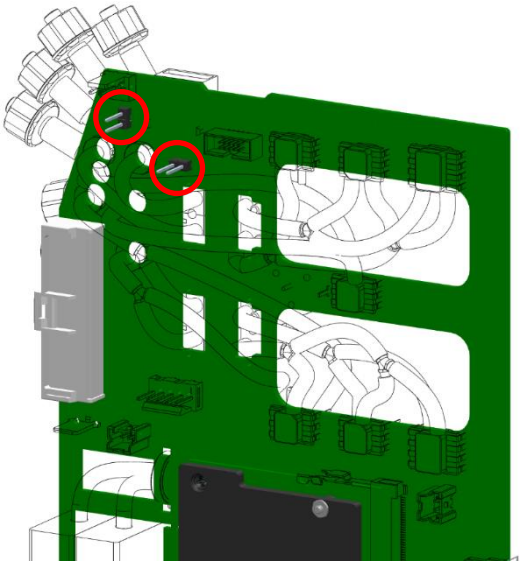

Figure 12-2: Jumper Location in Main Board

4. Insert a jumper to "Watchdog bypass" (JP1) in PB.

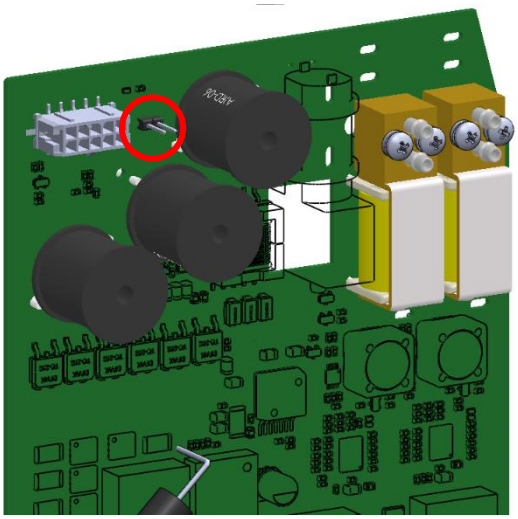

Figure 12-3: Jumper Location in Power Board

12.1.1.5 Image Burning

1. Plug in AC power.
2. Insert batteries.
3. Turn on the ventilator.
4. In “Tools → Software Update” tab that opens, Press the "**Burn Image version x.y**" button.
5. Once finished, shut down the ventilator by:
   - Pressing the ⏻ button at the top right corner of the screen.
   - Unplugging the AC power cable.
   - Remove 2 batteries from the ventilator.
6. Remove SD card.
7. Remove jumper from "SD boot" (J23) in MB.
8. Remove jumper from "MCU boot" (JP2) in MB.

9. Remove jumper from "Watchdog Bypass"(JP1) in PB.

12.1.1.6 Software Burning

1. Plug in AC power.
2. Insert batteries.
3. Turn on the Ventilator.
4. Enter service screen according to section 5.4.
5. Plug in Disk-On-Key with software package.
6. In “Tools → Software Update” tab, select the desired software version and press the "Start" Button to start the update process (see section 6.2.3).
7. When software has been successfully updated, shut the ventilator down or wait for the turn-off timer to end.
8. Remove Disk-On-Key.

12.1.1.7 Return to Service

1. Install PCB Cage Cover Assy according to section 8.1.3.
2. Install Top Cover according to section 8.1.1.